CLAAS

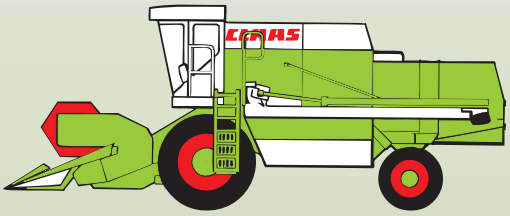

Dominator 140
Dominator 150

Technical Systems

Hydraulic System

SERVICE & PARTS

Contents

Chapter 1

Overall hydraulic system

1.1

Overall hydraulic system circuit diagram

with 3D sieve pan

1.1 Overall hydraulic system circuit diagram with 3D sieve pan

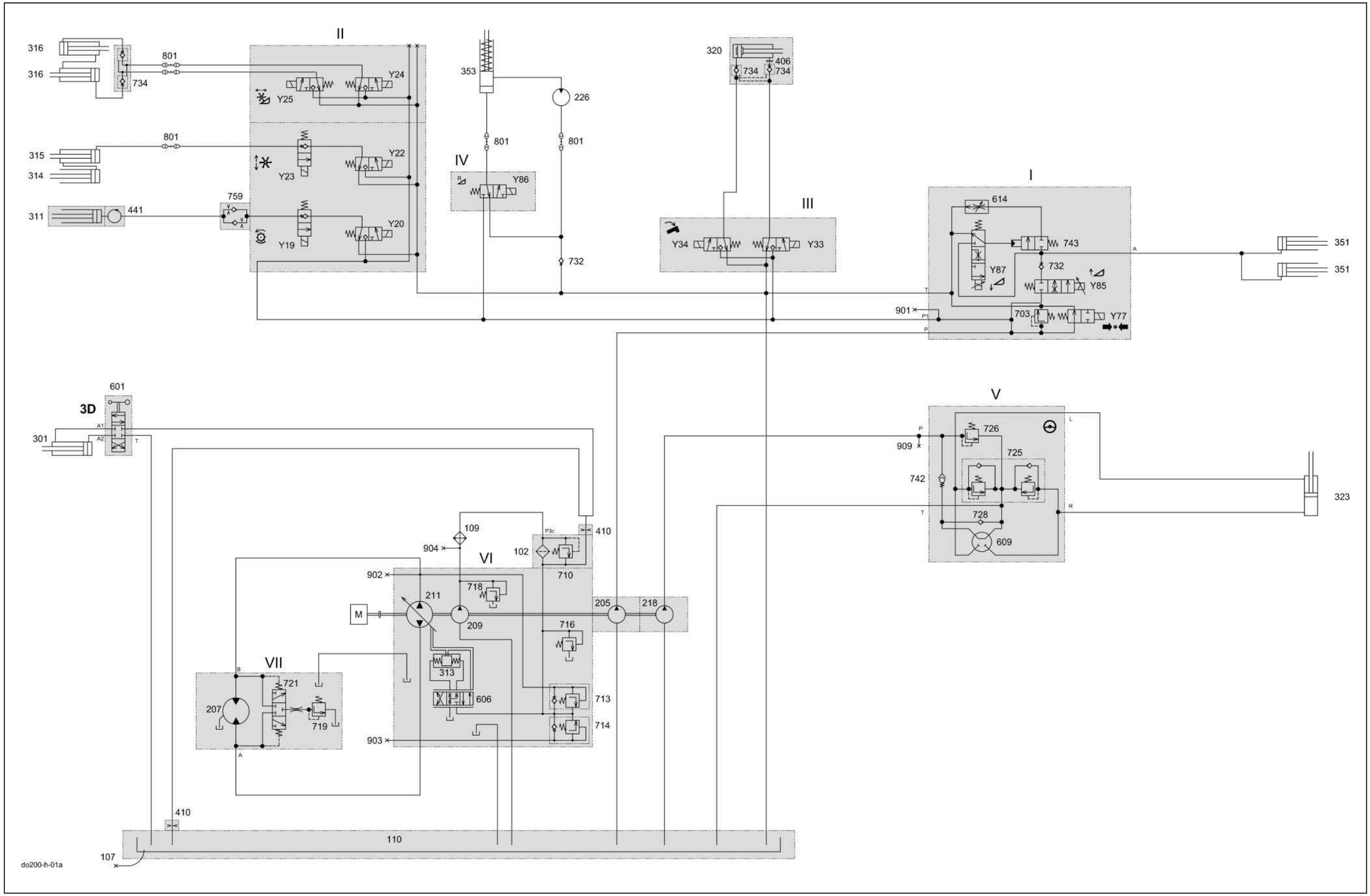

Key to diagram:

I	Master valve working hydraulics valve block
II	Front attachment / threshing drum variator working hydraulics valve block
III	Grain tank unloading tube working hydraulics valve block
IV	Front attachment reverse working hydraulics valve block
V	Orbitrol steering hydraulics
VI	Ground drive hydraulics hydrostatic pump
VII	Ground drive hydraulics hydrostatic motor
102	Pressure filter ..... 10 µm
107	Oil drain
109	Oil cooler
110	Oil tank
112	Return filter
205	Working hydraulics pump ..... 10.8 cm^3/rev.
207	Ground drive fixed displacement motor HMF 75 .... 75 cm^3/rev.
209	Ground drive feed pump ..... 22.5 cm^3/rev.
211	Ground drive variable displacement pump HPV 75 ..... 75 cm^3/rev.
218	Steering hydraulics pump ..... 6 cm^3/rev.
226	Front attachment reverser drive motor
301	3-D sieve pan hydraulic cylinder
311	Threshing drum variable-speed drive hydraulic cylinder
313	Ground drive servo control pump hydraulic cylinder
314	Reel raise/lower slave cylinder
315	Reel raise/lower main cylinder
316	Horizontal reel adjustment hydraulic cylinder
320	Swing grain tank unloading tube hydraulic cylinder
323	Steering hydraulic cylinder
351	Raise/lower front attachment hydraulic cylinder
353	Reverse front attachment hydraulic cylinder
406	Orifice plate ..... Ø 0.8 mm
410	Orifice plate ..... Ø 1.5 mm
441	Rotary coupling
601	3D sieve pan pendulum control 4/3 way valve
606	Ground drive servo control 4/3 way valve
609	Orbitrol steering system rotary valve
614	Front attachment lower flow control valve

Key to diagram:

703	Working hydraulics pressure relief valve ..... 180^{+10}
710	Ground drive filter bypass valve ..... 2 bar
713	Ground drive multi-function valve, reverse ..... 420 bar
714	Ground drive multi-function valve, forward ..... 420 bar
716	Ground drive feed pressure relief valve..... 19 bar
718	Ground drive feed circuit cold start injector ..... 25 bar
719	Ground drive flush pressure control valve ..... 10 bar
721	Ground drive flush-out shuttle valve
725	Steering double shock valve..... 150^{+15} bar
726	Steering pressure relief valve ..... 90^{+5} bar
728	Anti-cavitation valve (non-return valve)
732	Non-return valve
734	Lock-up valve unit (non-return valve)
742	Steering safety valve
743	Front attachment lower valve
759	One-way restrictor valve, two-sided
801	Quick release coupling
901	Working hydraulics measuring point
902	Ground drive hydraulics high pressure backward measuring point
903	Ground drive hydraulics high pressure forward measuring point
904	Ground drive hydraulics feed pressure measuring point
909	Steering hydraulics measuring point
Y19	Threshing drum variable-speed drive slow solenoid valve
Y20	Threshing drum variable-speed drive fast solenoid valve
Y22	Reel raise solenoid valve
Y23	Reel lower solenoid valve
Y24	Reel forward solenoid valve
Y25	Reel reverse solenoid valve
Y33	Grain tank unloading tube swing out solenoid valve
Y34	Grain tank unloading tube swing in solenoid valve
Y77	Working hydraulics master valve solenoid valve
Y85	Raise front attachment solenoid valve
Y86	Reverse front attachment solenoid valve
Y87	Lower front attachment solenoid valve

1.2

Overall hydraulic system circuit diagram

without 3D sieve pan

1.2 Overall hydraulic system circuit diagram without 3D sieve pan

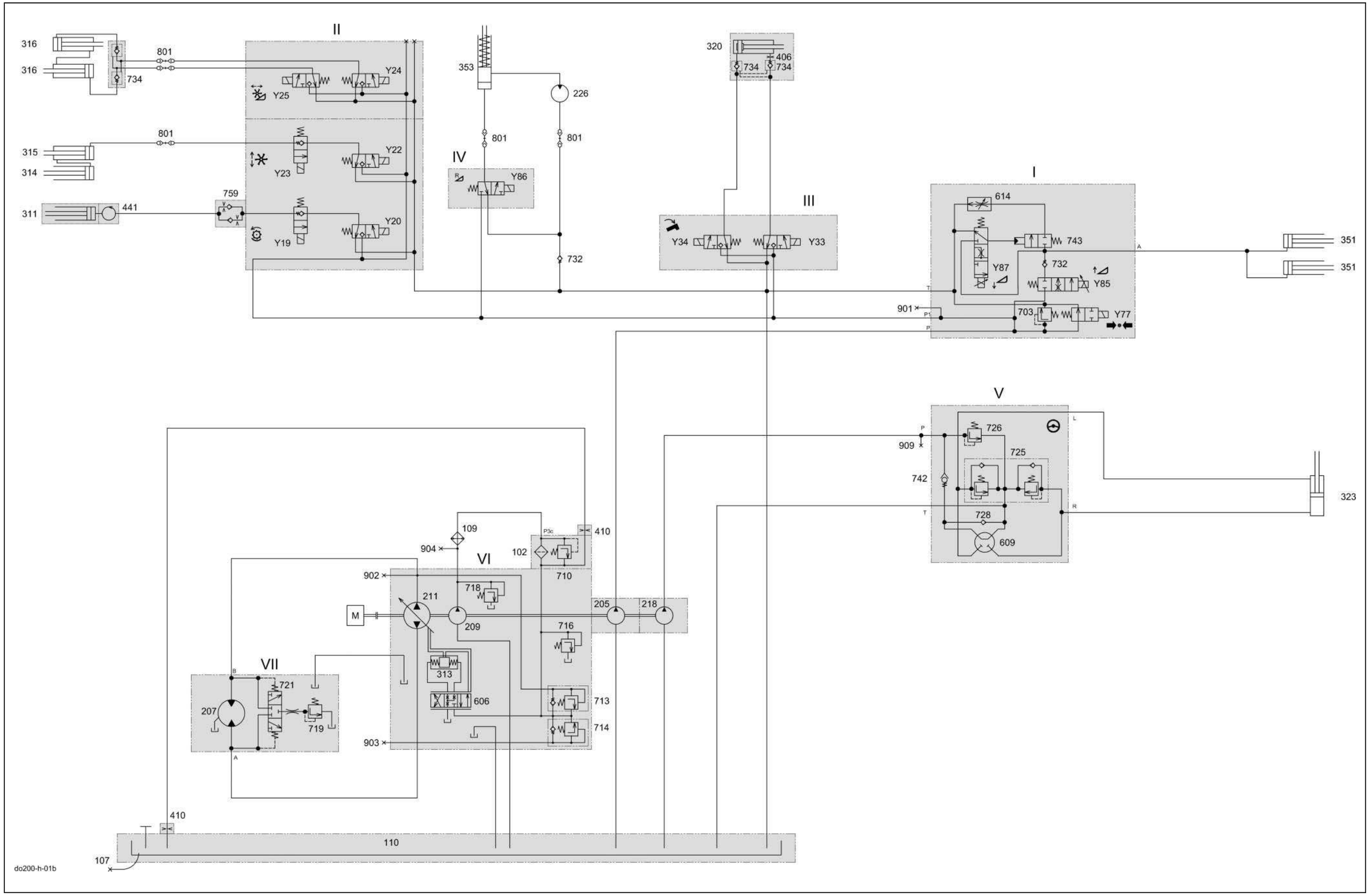

Key to diagram:

I	Master valve working hydraulics valve block
II	Front attachment / threshing drum variator working hydraulics valve block
III	Grain tank unloading tube working hydraulics valve block
IV	Front attachment reverse working hydraulics valve block
V	Orbitrol steering hydraulics
VI	Ground drive hydraulics hydrostatic pump
VII	Ground drive hydraulics hydrostatic motor
102	Pressure filter ..... 10 µm
107	Oil drain
109	Oil cooler
110	Oil tank
112	Return filter
205	Working hydraulics pump ..... 10.8 cm^3/rev.
207	Ground drive fixed displacement motor HMF 75 .. 75 cm^3/rev.
209	Ground drive feed pump ..... 22.5 cm^3/rev.
211	Ground drive variable displacement pump HPV 75 ..... 75 cm^3/rev.
218	Steering hydraulics pump ..... 6 cm^3/rev.
226	Front attachment reverser drive motor
311	Threshing drum variable-speed drive hydraulic cylinder
313	Ground drive servo control pump hydraulic cylinder
314	Reel raise/lower slave cylinder
315	Reel raise/lower main cylinder
316	Horizontal reel adjustment hydraulic cylinder
320	Swing grain tank unloading tube hydraulic cylinder
323	Steering hydraulic cylinder
351	Raise/lower front attachment hydraulic cylinder
353	Reverse front attachment hydraulic cylinder
406	Orifice plate ..... Ø 0.8 mm
410	Orifice plate ..... Ø 1.5 mm
441	Rotary coupling
606	Ground drive servo control 4/3 way valve
609	Orbitrol steering system rotary valve
614	Front attachment lower flow control valve

Key to diagram:

703	Working hydraulics pressure relief valve.....180^{+10}
710	Ground drive filter bypass valve .....2 bar
713	Ground drive multi-function valve, reverse.....420 bar
714	Ground drive multi-function valve, forward.....420 bar
716	Ground drive feed pressure relief valve.....19 bar
718	Ground drive feed circuit cold start injector .....25 bar
719	Ground drive flush pressure control valve.....10 bar
721	Ground drive flush-out shuttle valve
725	Steering double shock valve.....150^{+15} bar
726	Steering pressure relief valve .....90^{+5} bar
728	Anti-cavitation valve (non-return valve)
732	Non-return valve
734	Lock-up valve unit (non-return valve)
742	Steering safety valve
743	Front attachment lower valve
759	One-way restrictor valve, two-sided
801	Quick release coupling
901	Working hydraulics measuring point
902	Ground drive hydraulics high pressure backward measuring point
903	Ground drive hydraulics high pressure forward measuring point
904	Ground drive hydraulics feed pressure measuring point
909	Steering hydraulics measuring point
Y19	Threshing drum variable-speed drive slow solenoid valve
Y20	Threshing drum variable-speed drive fast solenoid valve
Y22	Reel raise solenoid valve
Y23	Reel lower solenoid valve
Y24	Reel forward solenoid valve
Y25	Reel reverse solenoid valve
Y33	Grain tank unloading tube swing out solenoid valve
Y34	Grain tank unloading tube swing in solenoid valve
Y77	Working hydraulics master valve solenoid valve
Y85	Raise front attachment solenoid valve
Y86	Reverse front attachment solenoid valve
Y87	Lower front attachment solenoid valve

1.3 Technical data

Working hydraulics	Dominator 140 -150	Sense of rotation	= Counterclockwise
		Drive n_{max}	= 3092 rpm
		Power	= 33 l/min at 10.8 cm^3/rev.
Steering hydraulics	Dominator 140 -150	Sense of rotation	= Counterclockwise
		Drive n_{max}	= 3092 rpm
		Power	= 18.5 l/min at 6 cm^3/rev.
Linde ground drive	Dominator 140 -150	Sense of rotation	= Counterclockwise
		Drive n_{max}	= 3092 rpm
		Power approx.	= 230 l/min at 75 cm^3/rev.
Linde feed pump	Dominator 140 -150	Sense of rotation	= Counterclockwise
		Drive n_{max}	= 3092 rpm
		Power	= 69.5 l/min at 22.5 cm^3/rev.

Note: The exact pump output can only be determined using a flowmeter. During this measurement, the output under maximum system pressure and at operating temperature (60°C) may fall by 15% max.

Chapter 2

Steering hydraulics

2.1

Steering hydraulics circuit diagram

2.1 Steering hydraulics circuit diagram

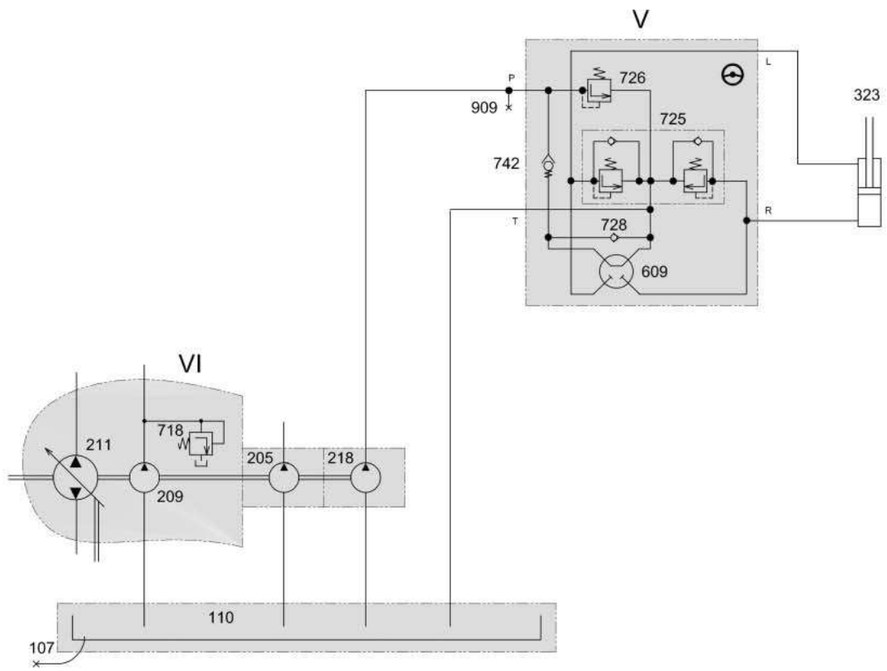

do200-h-04a

Key to diagram:

V	Orbitrol steering hydraulics
VI	Ground drive hydraulics hydrostatic pump
107	Oil drain
110	Oil tank
205	Working hydraulics pump
209	Ground drive feed pump
211	Ground drive variable displacement pump
218	Steering hydraulics pump
323	Steering hydraulic cylinder
609	Orbitrol steering system rotary valve
718	Ground drive feed circuit cold start injector..... 25 bar
725	Steering double shock valve ..... 150^{+15} bar
726	Steering pressure relief valve.....90^{+5} bar
728	Anti-cavitation valve (non-return valve)
742	Steering safety valve
909	Steering hydraulics measuring point

Pressure measurement :

Neutral circulation pressure = < 20 bar
System pressure = 90^{+5} bar
Shock valve = 150^{+15} bar

Note: These values refer to measurements made at the max. no-load speed of the diesel engine and a hydraulic oil operating temperature of approx. 60°C.

Description of function:

Steering	In the neutral steering position, oil flows freely through the steering control unit = Orbitrol (609). Turning the steering wheel to one direction causes the spools to rotate relative to each other. At a rotation of 1.5°, the channels to the chambers start opening. At 4°, the neutral position channels are completely closed. At 6°, the channels to the chambers are fully open. The rotation of the spools relative to each other is limited to ± 8°. A feed of pressurized oil to the rotor set has the following effects: Rotation of rotor: Feed of an oil quantity which is proportional to the rotation into the steering cylinder, the rear wheels being influenced. An internal mechanical return from the rotor to the outside spool so that the channels in the valve are closed when the rotor rotates to the same angle as the steering wheel.

2.2 Steering valve unit

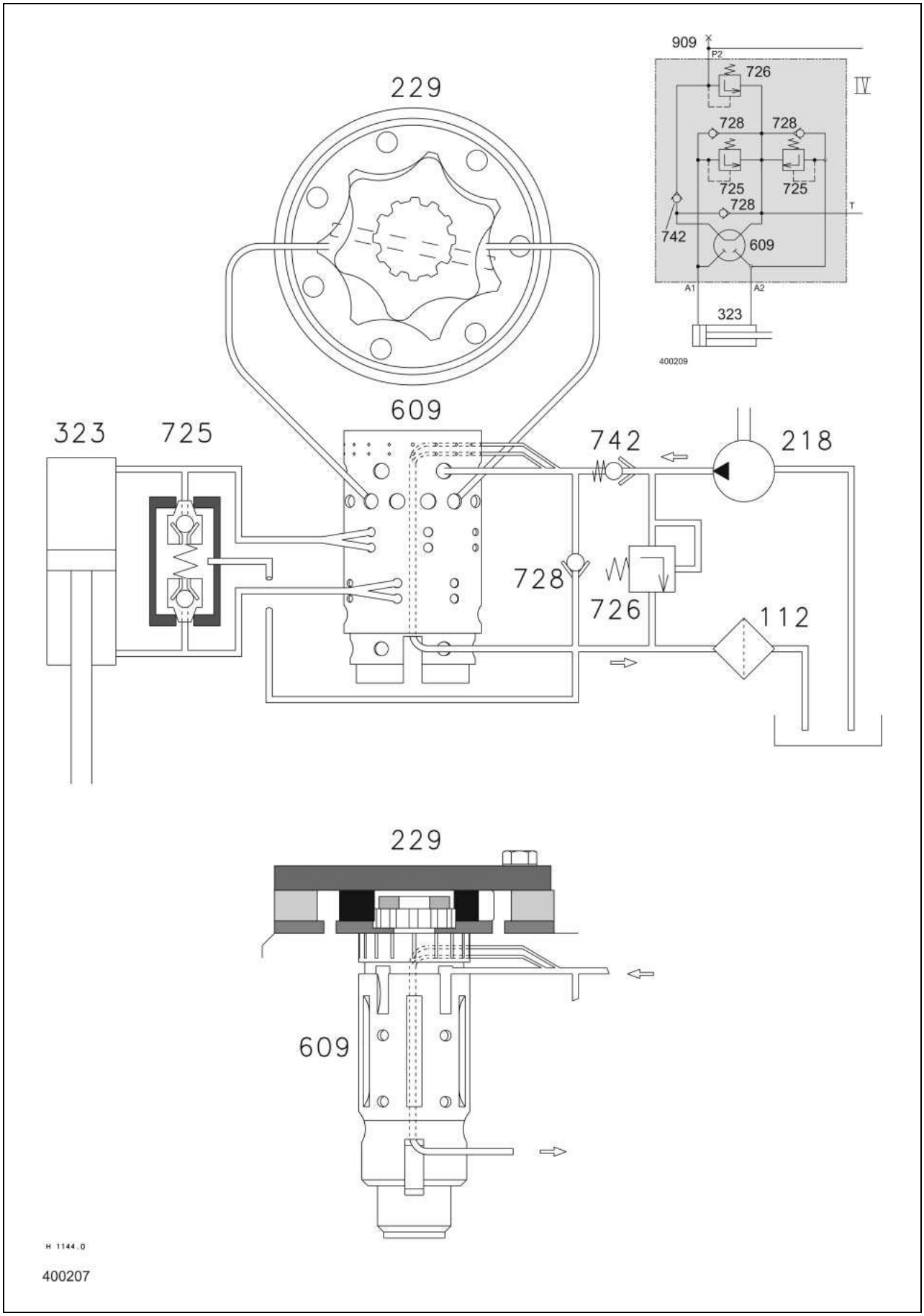

Key to diagram:

112	Return filter (not installed)
218	Steering hydraulics pump ..... 6 cm^3
229	Steering hydraulics proportioning pump
323	Steering hydraulic cylinder
609	Orbitrol steering system rotary valve
725	Steering double shock valve ..... 150^{+15} bar
726	Steering pressure relief valve ..... 90^{+5} bar
728	Anti-cavitation valve (non-return valve)
742	Steering safety valve
909	Steering hydraulics measuring point

Steering system

Open center: with the steering in neutral position, there is a connection between pump P2 and the tank.

Non reaction: when the steering is in neutral position, a force acting on the steered wheels does not cause any reaction on the steering wheel.

Valve unit

DANFOSS OSPB 125

O = Orbit (Orbitrol)
S = Steering
P = Pump
B = Version
125 = Oil displacement in cm^3/rev.

Design of valve unit

The steering valve consists of a steering hydraulics proportioning pump (229) and an Orbitrol rotary valve (609).

The Orbitrol rotary valve (609) is actuated by the steering gear shaft. Continued rotary movement of the steering gear shaft drive the steering hydraulics proportioning pump (229) by means of a socket-type shaft.

2.3 Function of steering

Neutral

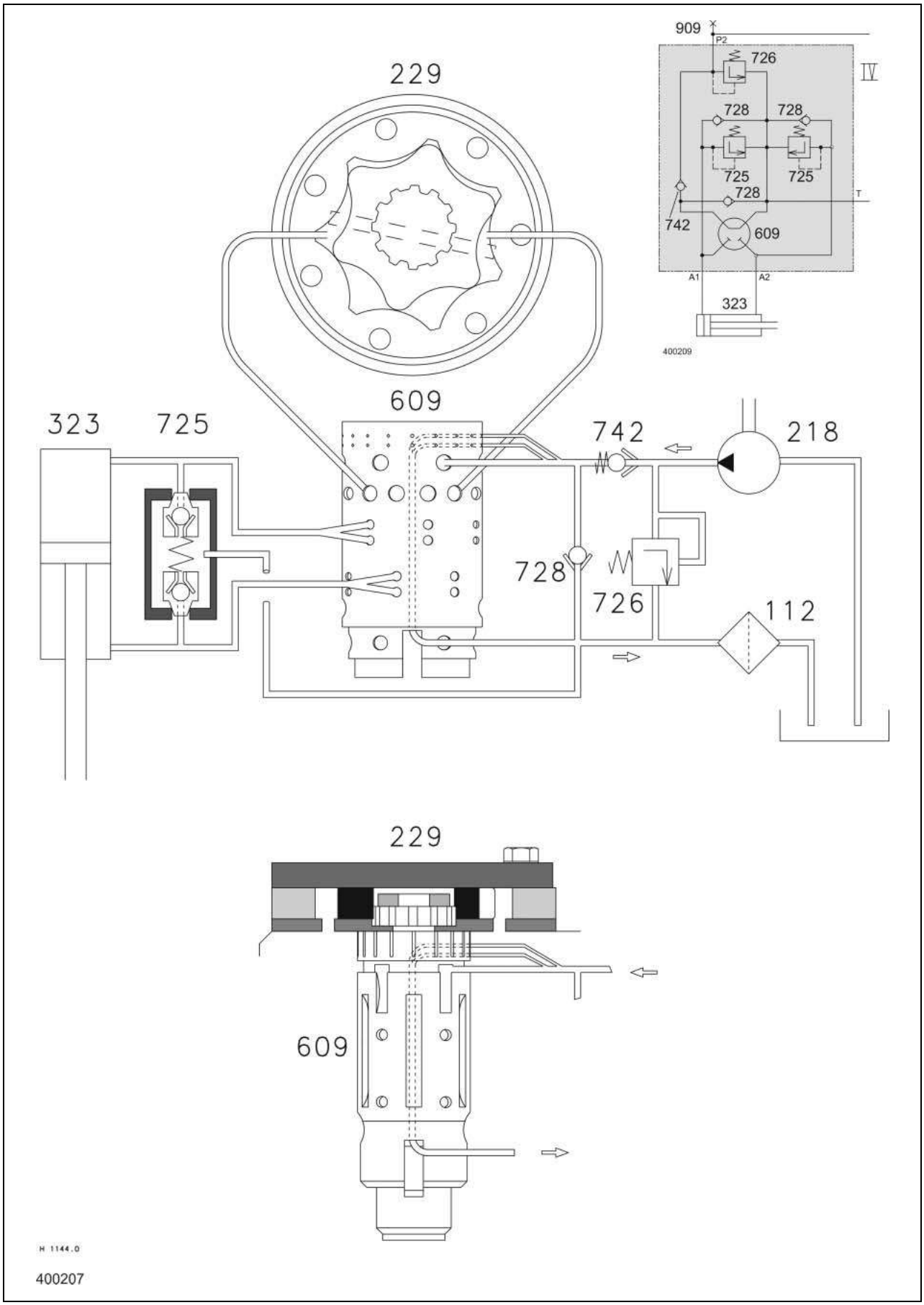

Description of function:

Neutral	In neutral position, the oil is directed back to the tank via the steering safety valve (742) and the Orbitrol rotary disc (609) (open center). The circulation pressure must not exceed 20 bar. Both sides of the steering hydraulic cylinder (323) are shut off by the Orbitrol rotary disc (609). Pressure peaks due to external forces on the steered axle are relieved to the tank via the steering double shock valves (725) (non reaction).

Steering actuation

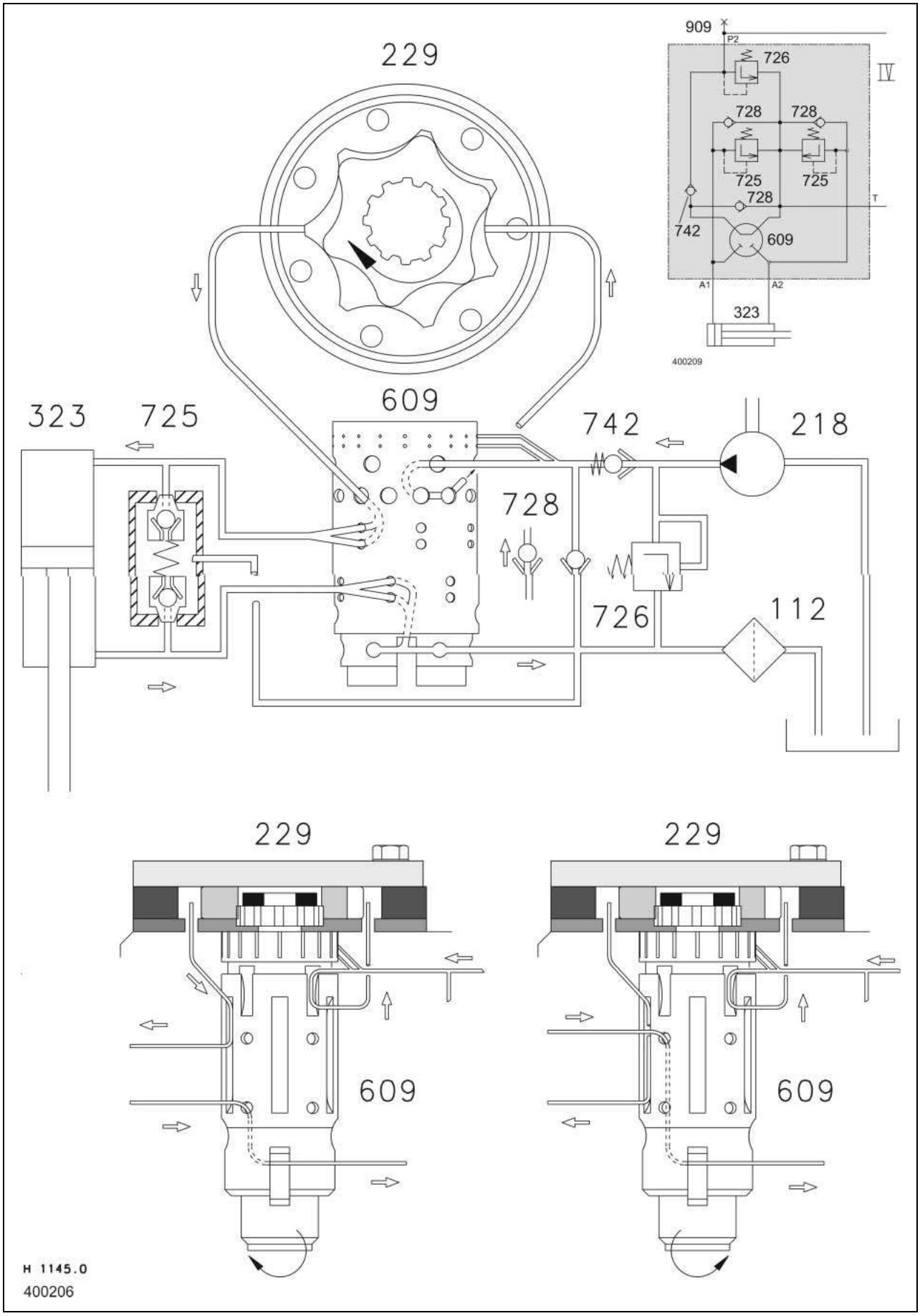

Description of function:

Steering actuation

When actuating the steering to one or another direction, the Orbitrol rotary disc (609) is rotated by up to 8° relative to the outside spool. During this process, the return line from the steering hydraulics pump (218) to the tank is closed and the connection to the steering hydraulics proportioning pump (229) is released.

Via the steering hydraulics proportioning pump (229) and the Orbitrol rotary disc (609), the volume flow is released as a function of the sense of rotation, path and speed of steering wheel motion to the ram or the ram ring surface of the steering hydraulic cylinder (323). Here, the displacing surface of the steering hydraulic cylinder (323) is connected with the return line to the tank via the Orbitrol rotary disc (609).

As soon as there is no more steering motion, leaf springs bring the outer rotary disc of the Orbitrol rotary disc (609) back to neutral position. Now both sides of the steering cylinder are shut off again and the connection from the steering hydraulics pump (218) to the tank is re-established.

Emergency steering

When the steering system is not supplied any more by the steering hydraulics pump (218), the steering safety valve (742) closes and thus ensures that no oil will escape from the steering system.

When the steering is actuated, the inner and outer disc of the Orbitrol rotary disc (609) are rotated relative to each other. Now the oil can be conveyed from one side of the steering hydraulic cylinder (323) via anti-cavitation valve (non-return valve) (728) to the other side through human power by the drive of the steering hydraulics proportioning pump (229).

2.4 Checking the steering

Steering gear shaft	Height play = 0.1 to 0.3 mm Clearance from bottom inside rotary disc = 3 mm
Return	When the steering wheel is actuated with the diesel engine shut off, the leaf springs in the rotary disc must bring the steering wheel back to its neutral position.
Reaction	If steering reaction is insufficient, internal leaks in the steering system must be checked. To do this, disconnect the lines from the steering cylinder and plug them tightly with plugs. With the oil at operating temperature and at max. no-load speed of the diesel engine, the steering wheel must not allow more than 4 turns/minute in both directions when using a force of approx. 25 Nm. When the actual number of turns is more than 4/minute, check the steering valve for leaks. When the actual number of turns is below 4/minute, check the steering cylinder for leaks.
Power	In case of steering forces above 25 Nm, check tyre size and pressure, condition of the cylinder rod and if stub axles move smoothly. A pressure test at the steering hydraulics measuring port must show the value 90^{+5} bar. To this end move the steering wheel up to the stop and hold it in this position. Adjusting the pressure relief valve on the machine in built-in condition is not possible. **Important!** Any installation work on the steering hydraulics must be followed by venting the system on both hydraulic lines of the steering cylinder with the diesel engine running.

Chapter 3

Working hydraulics

3.1

Working hydraulics circuit diagram

- without straw collector

3.1 Working hydraulics circuit diagram
- without straw collector

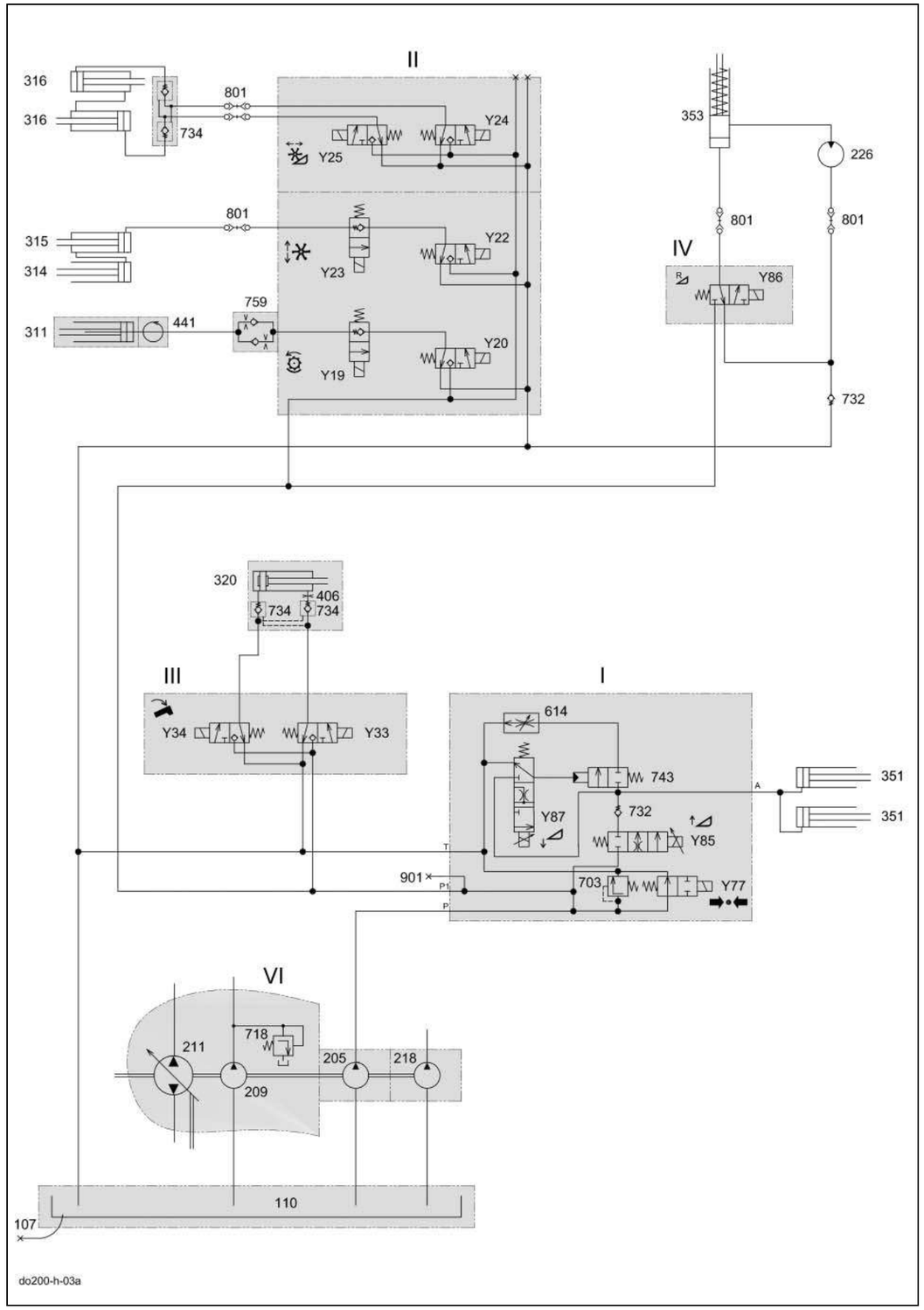

Key to diagram:

I	Master valve working hydraulics valve block
II	Front attachment / threshing drum variator working hydraulics valve block
III	Grain tank unloading tube working hydraulics valve block
IV	Front attachment reverse working hydraulics valve block
VI	Ground drive hydraulics hydrostatic pump
107	Oil drain
110	Oil tank
112	Return filter
205	Working hydraulics pump ..... 10.8 cm^3/rev.
209	Ground drive feed pump ..... 22.5 cm^3/rev.
211	Ground drive variable displacement pump HPV 75 ..... 75 cm^3/rev.
218	Steering hydraulics pump ..... 6 cm^3/rev.
226	Front attachment reverser drive motor
311	Threshing drum variable-speed drive hydraulic cylinder
314	Reel raise/lower slave cylinder
315	Reel raise/lower master cylinder
316	Horizontal reel adjustment hydraulic cylinder
320	Swing grain tank unloading tube hydraulic cylinder
351	Raise/lower front attachment hydraulic cylinder
353	Reverse front attachment hydraulic cylinder
406	Orifice plate ..... Ø 0.8 mm
441	Rotary coupling
614	Front attachment lower flow control valve
703	Working hydraulics pressure relief valve ..... 180^{+10}
718	Ground drive feed circuit cold start injector ..... 25 bar
732	Non-return valve
734	Lock-up valve unit (non-return valve)
743	Front attachment lower valve
759	One-way restrictor valve, two-sided
801	Quick release coupling
901	Working hydraulics measuring point
Y19	Threshing drum variable-speed drive slow solenoid valve
Y20	Threshing drum variable-speed drive fast solenoid valve
Y22	Reel raise solenoid valve
Y23	Reel lower solenoid valve
Y24	Reel forward solenoid valve
Y25	Reel reverse solenoid valve
Y33	Grain tank unloading tube swing out solenoid valve
Y34	Grain tank unloading tube swing in solenoid valve
Y77	Working hydraulics master valve solenoid valve
Y85	Raise front attachment solenoid valve
Y86	Reverse front attachment solenoid valve
Y87	Lower front attachment solenoid valve

Description of function:

The working hydraulics of the Dominator series is an open hydraulic system.

The maximum system pressure is limited to 180^{+10} bar by means of pressure relief valve (703).

3.2 Main valve

with master valve, pressure relief valve, raise/lower front attachment

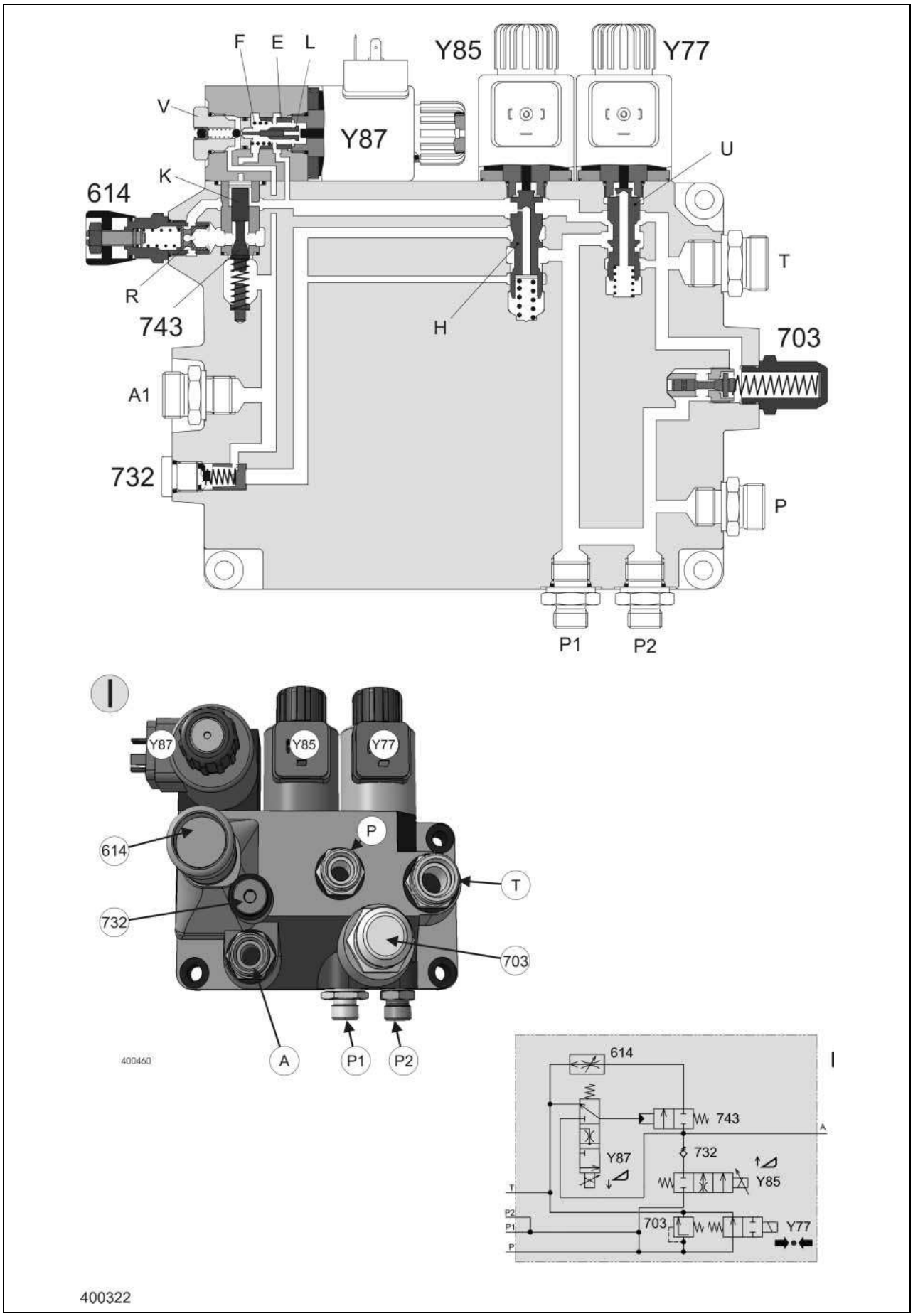

Key to diagram:

614	Flow control valve .....5 - 50 l/min
703	Pressure relief valve .....180^{+10} bar
732	Non-return valve (inlet valve)
743	Lower front attachment pilot valve
Y77	Master valve solenoid valve
Y85	Raise front attachment solenoid valve
Y87	Lower front attachment solenoid valve
A1	Raise/lower front attachment hydraulic cylinder
P1	Working hydraulics pump port
P2	Parallel port for working hydraulics of other directional control valves
T	Tank port
E	Pilot spool
F	Compression spring
H	Front attachment raise spool
K	Front attachment quick lower ram
L	Lower front attachment spool
R	Control spool.....5 - 50 l/min
U	Master valve control spool
V	Pilot valve

Description of function:

Pressure limitation

The spring in the pressure relief valve (703) is pre-stressed for a system pressure of **180^{+10} bar**. The pressure setting may be modified by removing or adding shims.

A 0.5 mm shim corresponds to approx. 10 bar
A 1.2 mm shim corresponds to approx. 23 bar

Note: The above values refer to a rated pressure of 180 bar and may deviate, depending on the actual system. Each time the setting has been modified, the system pressure must be checked.

Basic setting

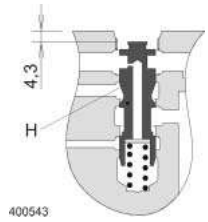

To ensure the position of spool (H) for the function "Raise front attachment", the dimension from the top edge of the spool (H) to the body must be **4.3 mm** with the coil core (Y85) removed. The position may be corrected by removing or adding shims above the compression spring.

A weaker compressed spring - as compared to the spool (H) - is located below the spool of the master valve (U).

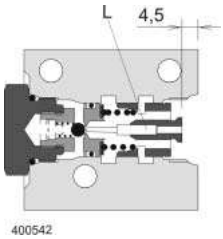

In order to guarantee the "Front attachment lower" function, the clearance between the top edge of spool (L) and the housing must be **4.5 mm** with the coil core (Y87) removed. The position may be corrected by removing or adding shims.

Spare part no: 0.1 mm = 0218 886.0
0.2 mm = 0218 887.0

The drop rate of the front attachment can be adjusted to a drop time of **5-6 sec.** over the entire stroke range.on the flow control valve (614).

Key to diagram:

P	Pump port
M	Measuring port
R(T)	Return line port (tank)

Description of function:

Pressure relief valve

The pressure relief valve protects the hydraulic system and thus the connected mechanical components from damage by excessive forces. The spring in the pressure relief valve (703) is pre-stressed for a system pressure of 180^{+10} bar. The pressure setting may be modified by removing or adding shims.

A 0.5 mm shim corresponds to approx. 10 bar
A 1.2 mm shim corresponds to approx. 23 bar

Note: The above values refer to a rated pressure of 180 bar and may deviate, depending on the actual system. Each time the setting has been modified, the system pressure must be checked.

Note: These values refer to measurements made at the max. no-load speed of the diesel engine and a hydraulic oil operating temperature of approx. 60°C.

Description of function:

Function of master valve

The master valve (Y77) blocks the circulating volume flow from P to T of the open hydraulic system when a working hydraulics function has been actuated. Single-acting functions are an exception to this if the consumer is relieved to the tank.

In neutral position, the master valve (Y77) is not actuated, making the oil flow back to the tank via the ring channels on the spool (U). Due to the large channel cross-section, the circulation pressure is very low.

When pressure is successfully built up at a consumer, the master valve (Y77) is actuated simultaneously with the directional control valve of the corresponding function. Now spool (U) closes the connection from P to T, and the top ring channel being closed first in order to achieve smooth switching-over.

The pressure relief valve (703) opens at a maximum system pressure of 180±10 bar and relieves the pressure to the tank.

Raise front attachment function

Raising

When the "Raise" function is used, the directional control valve (Y85) and the master valve (Y77) are actuated with 12 V DC.

The spool (H) is moved to its end position, making oil flow via both ring channels on the spool (H). The full volume flow is directed to the consumer port (A1) via the non-return valve (732) and raises the front attachment.

Lower front attachment function

Lowering

When the "Lower" function is used, only the directional control valve (Y87) is actuated with 12 V DC.
The spherical seat in pilot valve (V) is opened and the spring force (F) is overcome through the force of the solenoid. The spool (E) closes the ring channel to the return line, making the load pressure of the front attachment act on the ram top side (K) and open the pilot valve (743). The oil is now displaced by the front attachment via the pilot valve (743) and the control spool (R) into the return line to the tank.

Description of function:

Flow control valve

When the "Lower front attachment – fast" function is used, the oil displaced via port A flows to the tank (T) through the restrictor in the control spool of the flow control valve (614).
This creates a ram pressure ahead of the control spool, making the latter move against the control spring and restrict the return channel to the tank (T) as a function of the load pressure.
When the load pressure in port A changes, both the volume flow through the restrictor and the load pressure against the control spool change, too, and consequently also the return channel cross-section.
This control function keeps the volume flow and therefore the front attachment drop rate constant, independent of the load pressure.
The front attachment drop rate is adjusted merely by the pre-stress of the control spring at the handwheel.

Relieve tension of control spring = lower drop rate
Tensioning the control spring = increase drop rate

3.3 Threshing drum speed control

3/3 way solenoid valve Y19/Y20

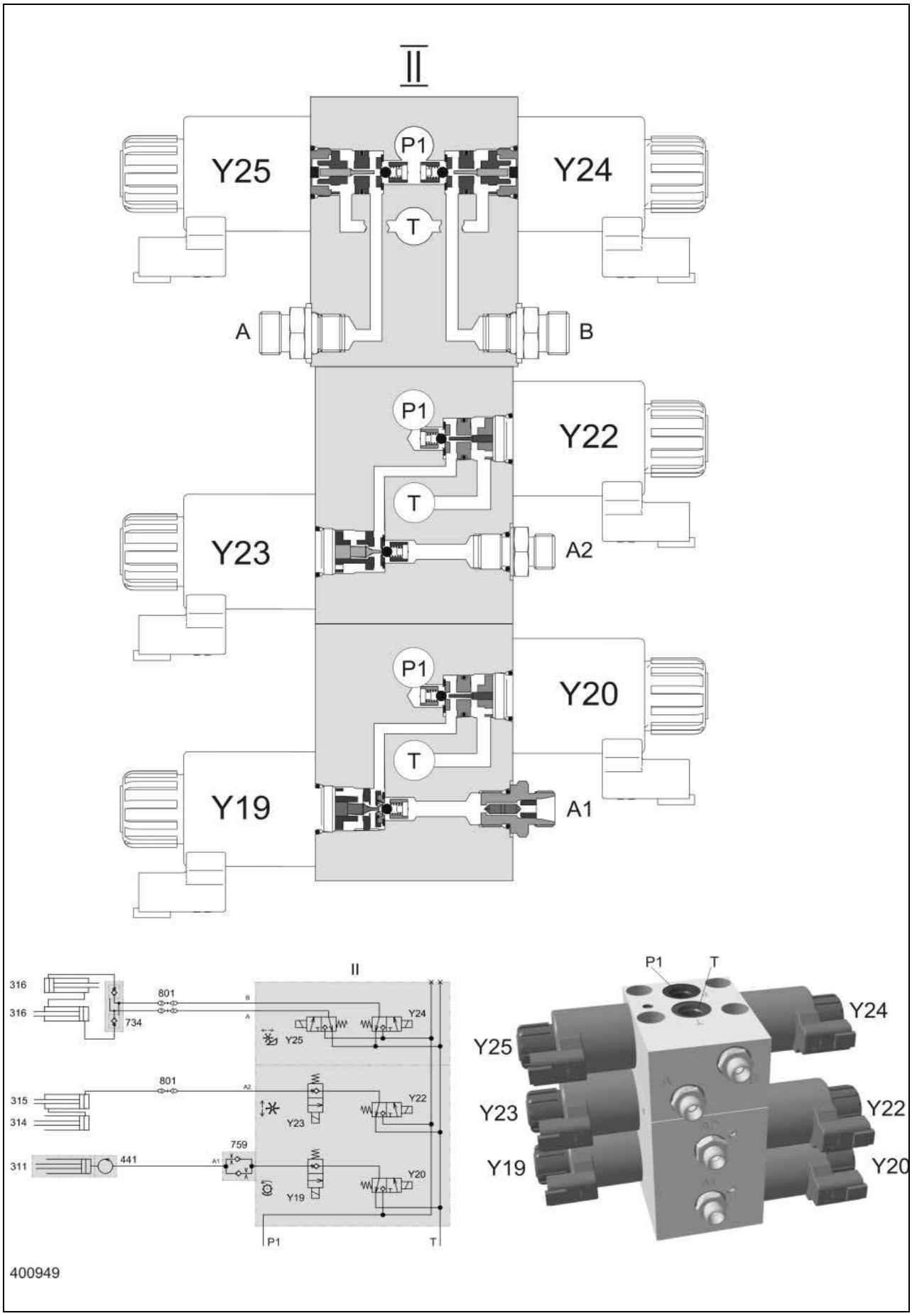

Key to diagram:

II	Front attachment / threshing drum variator working hydraulics valve block
311	Threshing drum variable-speed drive hydraulic cylinder
314	Reel raise/lower slave cylinder
315	Reel raise/lower master cylinder
316	Horizontal reel adjustment hydraulic cylinder
441	Rotary coupling
759	One-way restrictor valve, two-sided
801	Quick release coupling
Y19	Threshing drum variable-speed drive slow solenoid valve
Y20	Threshing drum variable-speed drive fast solenoid valve
Y22	Reel raise solenoid valve
Y23	Reel lower solenoid valve
Y24	Reel forward solenoid valve
Y25	Reel reverse solenoid valve

Description of function:

Neutral function

The threshing drum variable-speed drive hydraulic cylinder (311) is tightly closed by the ball seat in the valve insert of the threshing drum slow solenoid valve (Y19).

Increase speed function

The threshing drum fast solenoid valve (Y20) and the master valve are actuated at the same time. The corresponding pilot spool opens the ball in the valve insert and closes the return line to the tank. The pressure thus rising opens the ball in the valve insert of the unactuated threshing drum slow solenoid valve (Y19). The oil flows to consumer port A1 via the notch in the one-way restrictor valve (759).

Reduce speed function

Solenoid valve (Y19) is actuated without the master valve. The pilot spool in question opens the ball in the valve insert and thus relieves the oil pressure via the notch of the one-way restrictor valve (759) and the valve insert of the unactuated threshing drum fast solenoid valve (Y20) to the tank.

Note: To ensure even control function in both directions, volume flow flows via the notches in the one-way restrictor valve (759) when adjusting the variator.

Threshing drum speed control
Hydraulic cylinder with rotary coupling

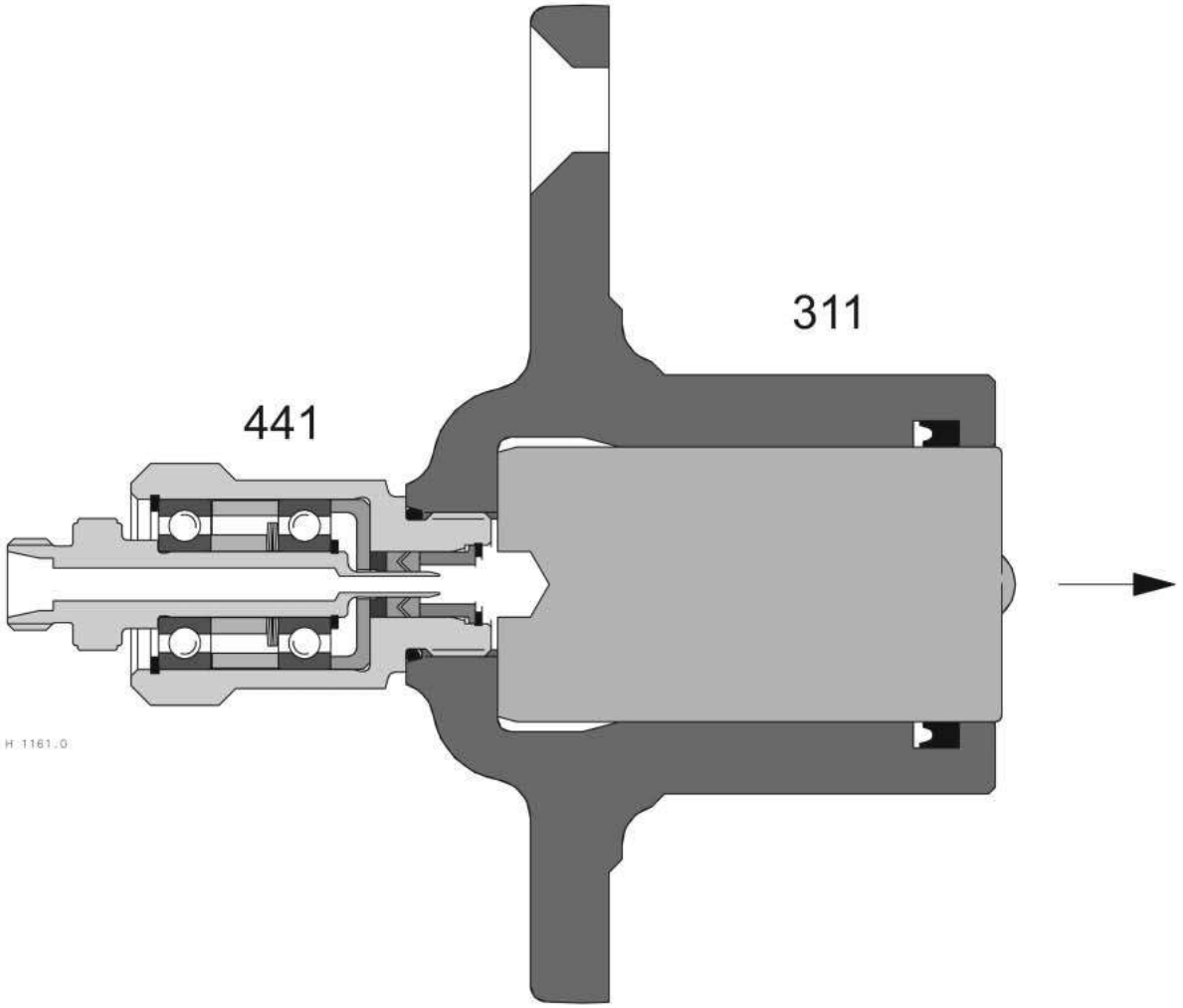

400954

Key to diagram:	311	Threshing drum variable-speed drive hydraulic cylinder
	441	Rotary coupling

3.4 Vertical reel adjustment

3/3 way valve Y22/Y23

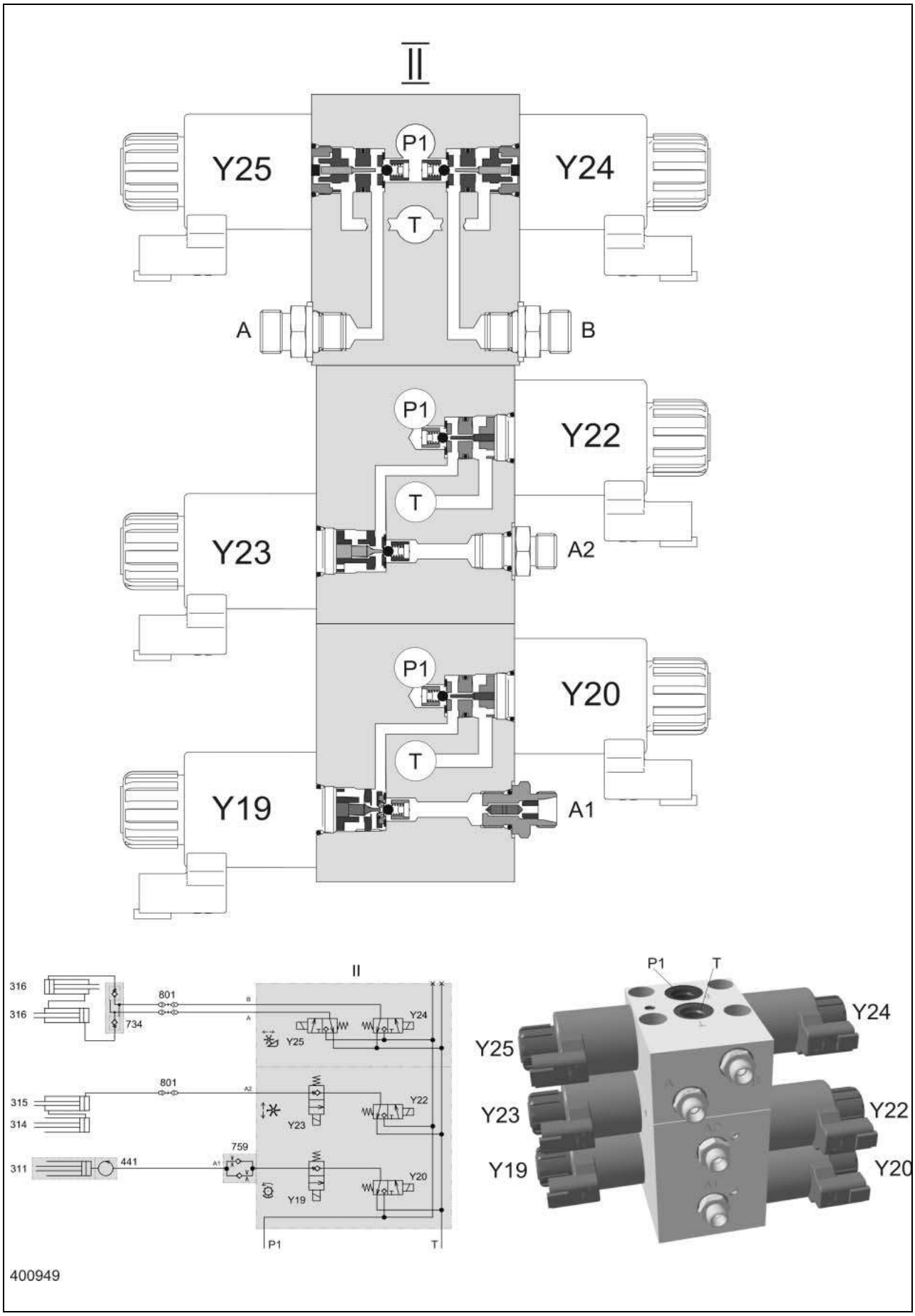

Key to diagram:

II	Front attachment / threshing drum variator working hydraulics valve block
311	Threshing drum variable-speed drive hydraulic cylinder
314	Reel raise/lower slave cylinder
315	Reel raise/lower master cylinder
316	Horizontal reel adjustment hydraulic cylinder
441	Rotary coupling
759	One-way restrictor valve, two-sided
801	Quick release coupling
Y19	Threshing drum variable-speed drive slow solenoid valve
Y20	Threshing drum variable-speed drive fast solenoid valve
Y22	Reel raise solenoid valve
Y23	Reel lower solenoid valve
Y24	Reel forward solenoid valve
Y25	Reel reverse solenoid valve

Description of function:

Neutral	The hydraulic cylinders are tightly closed by the valve insert of solenoid valve (Y23).
Raise reel	The solenoid valve (Y22) and the master valve (Y77) are actuated at the same time. The corresponding pilot spool opens the ball in the valve insert and closes the return line to the tank. The pressure P1 which consequently rises opens the valve insert of the unactuated solenoid valve (Y23) and the oil flows to the consumer port A2.
Lower reel	Solenoid valve (Y23) is actuated without the master valve (Y77). The pilot spool in question opens the ball in the valve insert and thus relieves the oil pressure to the tank via the valve insert of the unactuated solenoid valve (Y22).

Vertical reel adjustment
Hydraulic cylinders

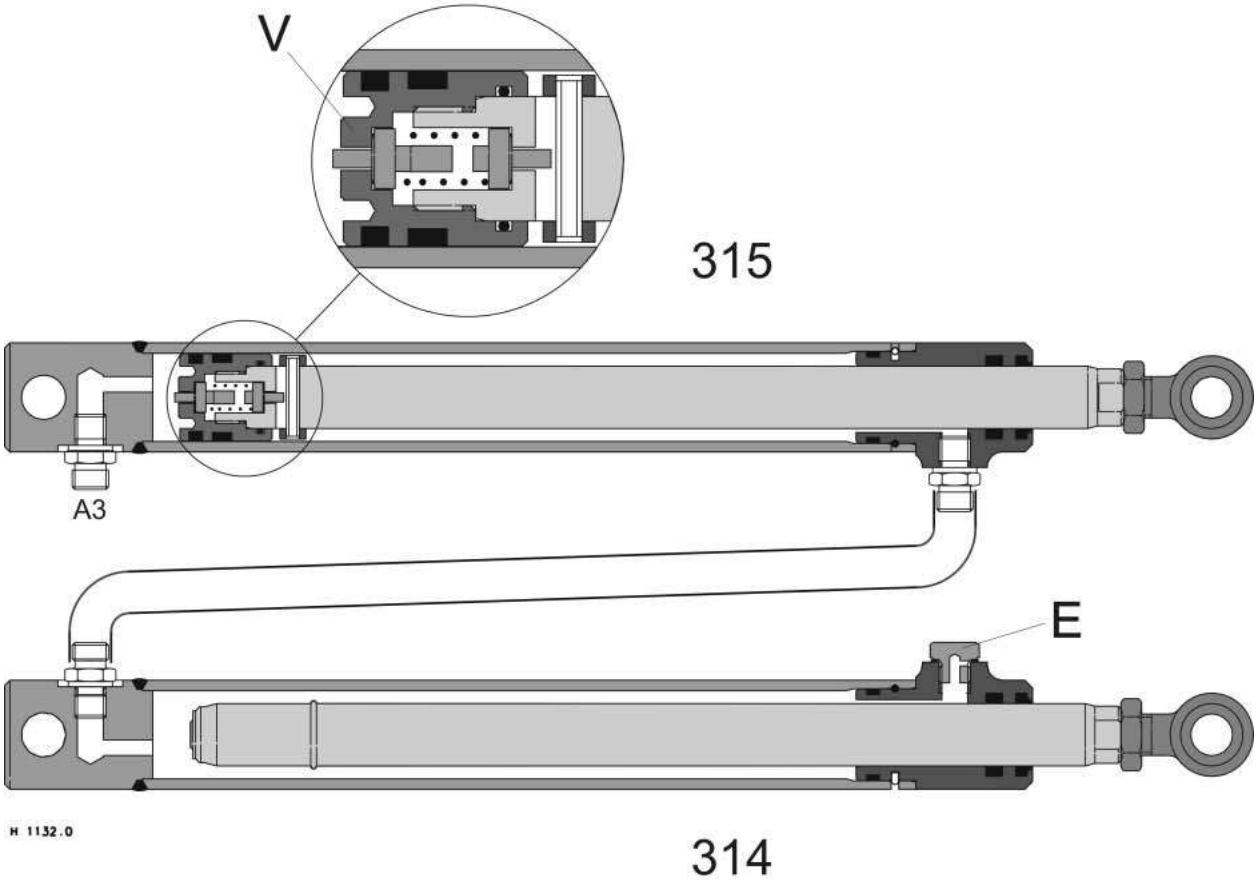

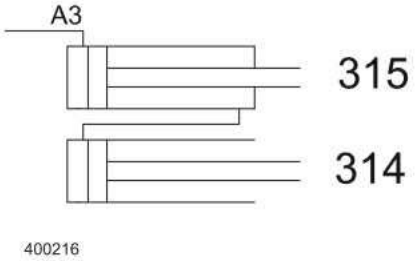

400217

Key to diagram:

314	Reel raise/lower slave cylinder
315	Reel raise/lower master cylinder
A3	Hydraulic cylinder port
E	Vent plug
V	Bottom valves

Description of function:

Bottom valves

The bottom outlet valves (V) in master cylinder (315) are opened upon reaching the upper stop position so that the slave cylinder can be filled and vented.

Note: For repairs, it is recommended to remove the hydraulic rams in the raised reel position since the slave cylinder is filled only with the master cylinder fully extended. During this process support and secure the reel properly.

3.5 Horizontal reel adjustment
4/3 way valve Y24/Y25

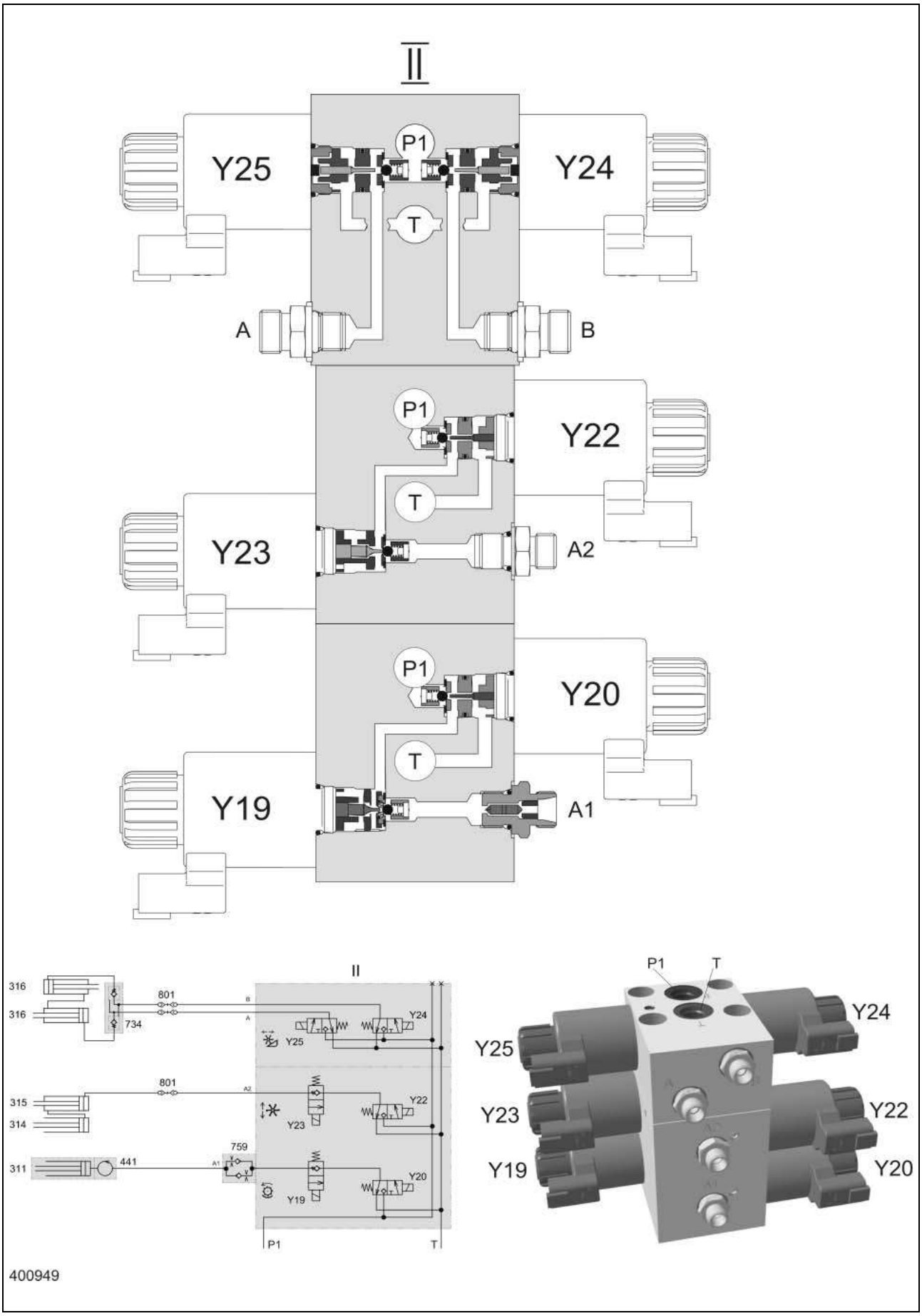

Key to diagram:

II	Front attachment / threshing drum variator working hydraulics valve block
311	Threshing drum variable-speed drive hydraulic cylinder
314	Reel raise/lower slave cylinder
315	Reel raise/lower master cylinder
316	Horizontal reel adjustment hydraulic cylinder
441	Rotary coupling
759	One-way restrictor valve, two-sided
801	Quick release coupling
Y19	Threshing drum variable-speed drive slow solenoid valve
Y20	Threshing drum variable-speed drive fast solenoid valve
Y22	Reel raise solenoid valve
Y23	Reel lower solenoid valve
Y24	Reel forward solenoid valve
Y25	Reel reverse solenoid valve

Description of function:

Neutral

Both sides of the hydraulic cylinder are tightly closed by the lock-up valve unit (734).

Reel forward / reverse

Depending on the necessary direction of movement, one of the solenoid valves (Y24/Y25) and, at the same time, the master valve (Y77) is actuated. The corresponding pilot spool opens the ball in the valve insert and closes the return line to the tank. The pressure which consequently rises builds up against the ram in lock-up valve unit (734) and thus unlocks the return line to the tank in the opposite port.
The return line of the hydraulic cylinder is relieved to the tank via the valve insert of the unactuated solenoid valve (Y24/Y25). The pressure rising further now opens the lock-up valve unit (734) on the pressure side and the hydraulic cylinders are retracted or extended.

Horizontal reel adjustment
Hydraulic cylinders

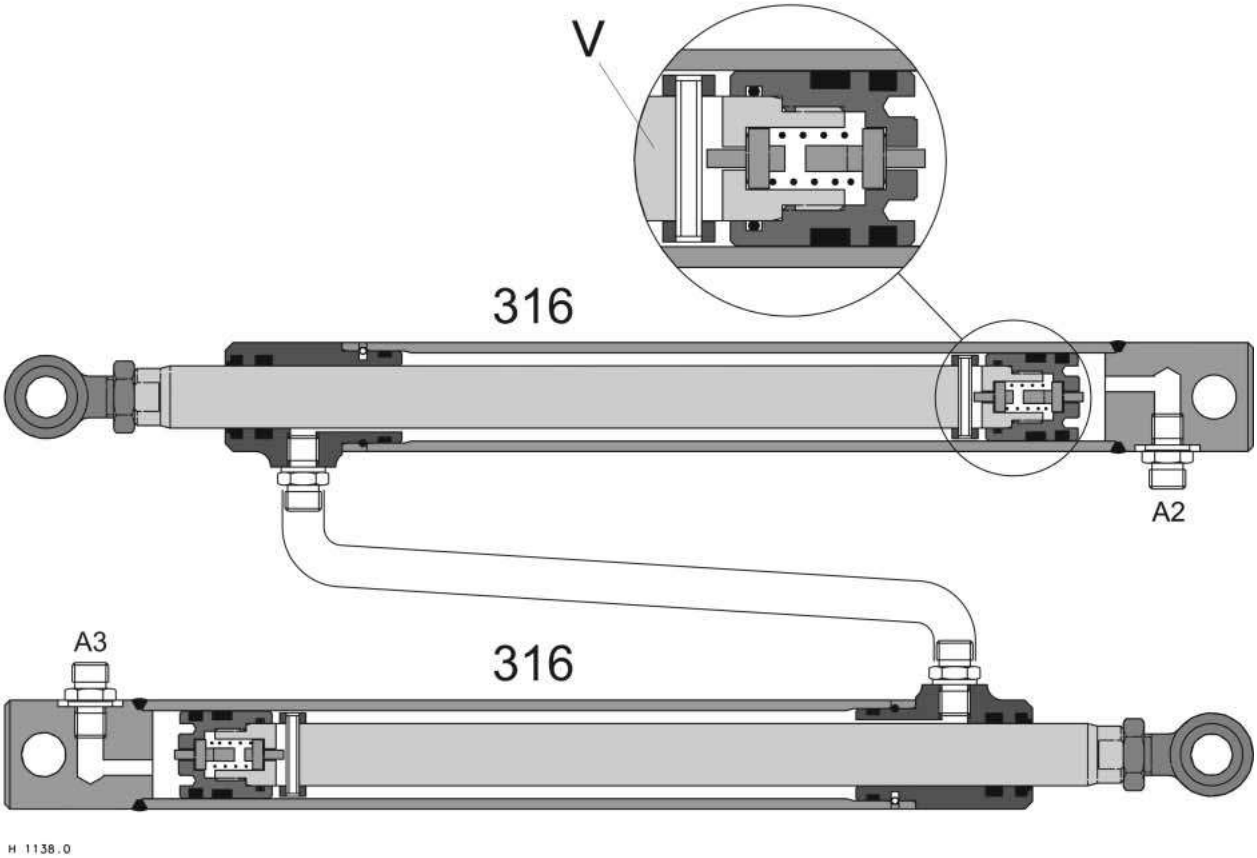

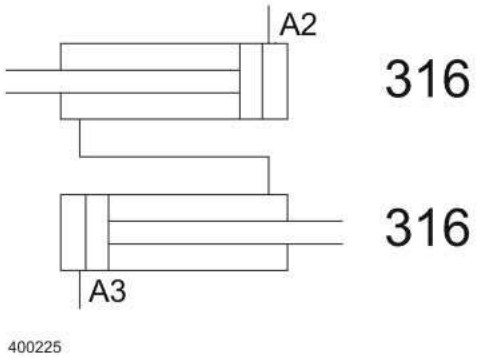

400226

Key to diagram:

316	Horizontal reel adjustment hydraulic cylinder
A2	Hydraulic cylinder port
A3	Hydraulic cylinder port
V	Bottom valves

Description of function:

Bottom valves

The bottom outlet valves (V) open every time an end position is reached so that air inclusions in the connection between the two rams can be flushed out.
After a repair, the cylinders must be flushed in both end positions for approx. 15 sec.

Horizontal reel adjustment
Lock-up valve unit (734)

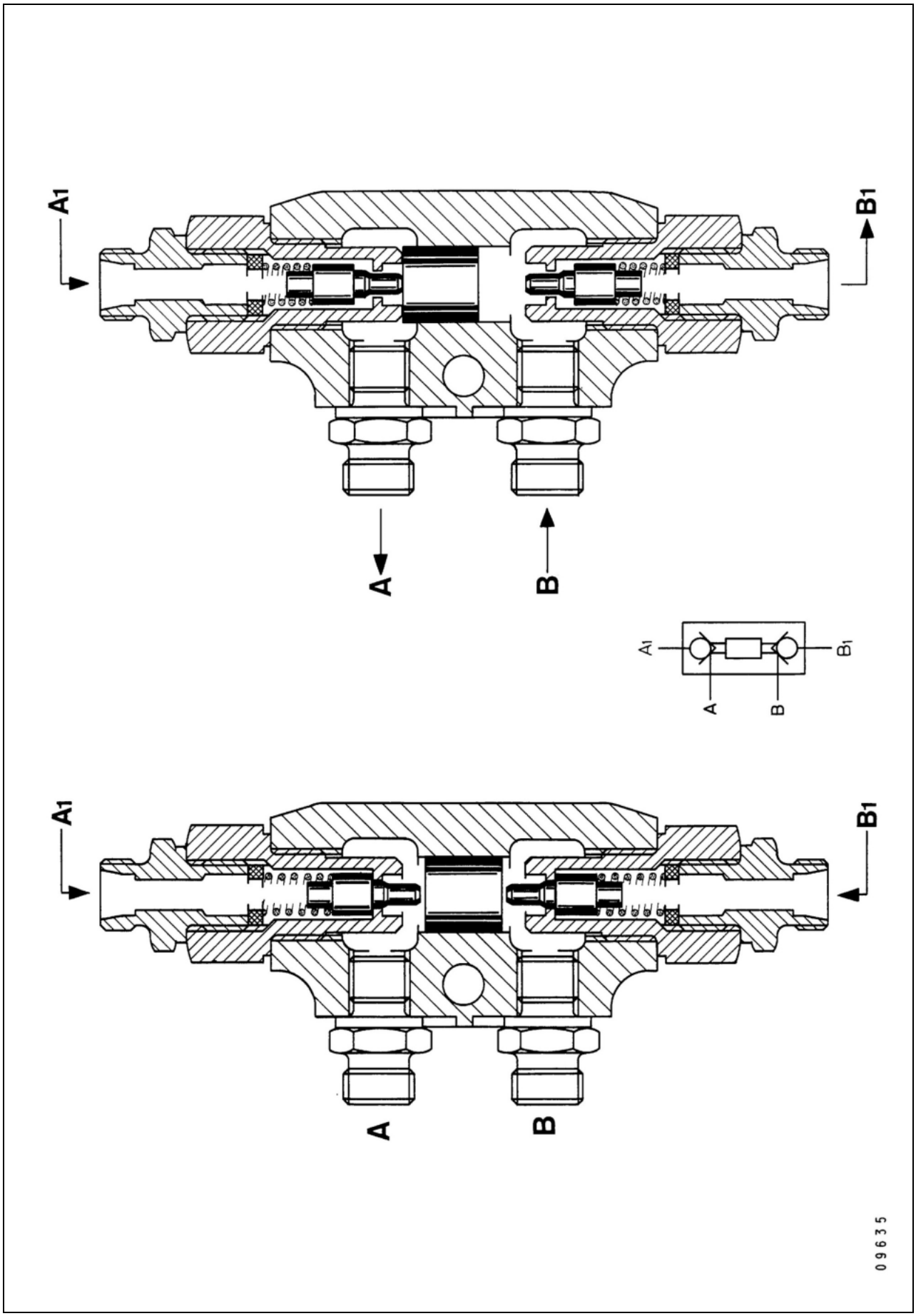

Key to diagram:

A	Hydraulic valve port
B	Hydraulic valve port
A1	Consumer port
B1	Consumer port

Description of function:

Lock-up valve units (pilot controlled non-return valves) are used in order to lock functions while pressure is relieved and thus to ensure a fixed position of a consumer.
A rising pressure in port (B) moves the internal ram (K). This opens the opposite non-return valve in port A - the return line of the hydraulic cylinder to the tank is relieved (connection A-A1).
The continued pressure increase now opens the non-return valve in port B. The connection to consumer (B-B1) is relieved.

3.6 Swinging the grain tank unloading tube
4/3 way valve Y33/Y34

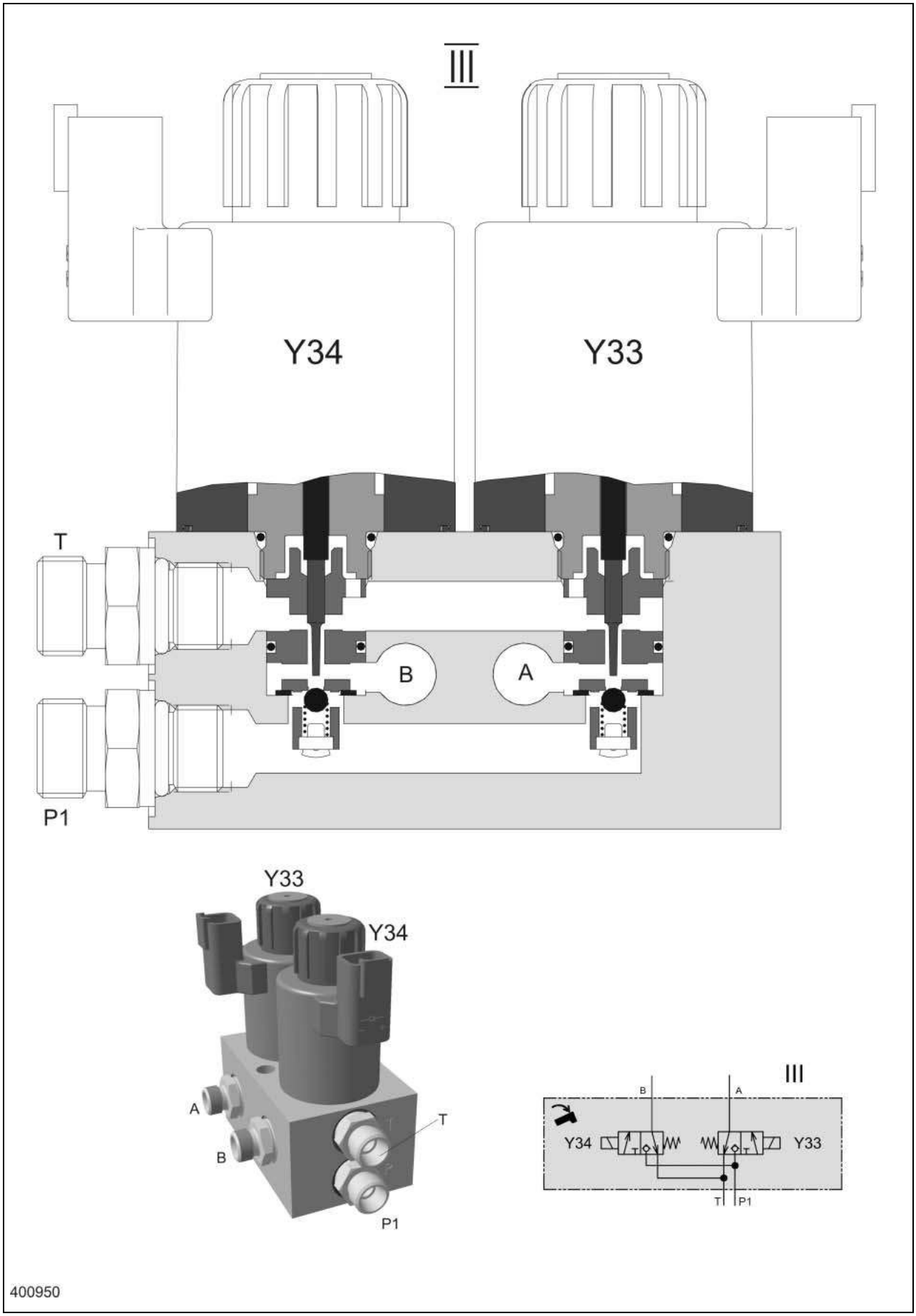

Key to diagram:

III	Grain tank unloading tube working hydraulics valve block
Y33	Grain tank unloading tube swing out solenoid valve
Y34	Grain tank unloading tube swing in solenoid valve
A	Consumer port
B	Consumer port
P1	Working hydraulics pump port
T	Tank port

Description of function:

Neutral function

Both sides of the hydraulic cylinder (320) are tightly closed by the non-return valves (734).

Description of function

Depending on the necessary direction of movement, one of the solenoid valves (Y33/Y34) and, at the same time, the master valve (Y77) is actuated. The corresponding pilot spool opens the ball in the valve insert and closes the return line to the tank.
The pressure which consequently rises builds up against the ram in lock-up valve unit (734) of the swing grain tank unloading tube hydraulic cylinder (320) and in this process opens port A and/or B.

The return line of the hydraulic cylinder is relieved to the tank via the valve insert of the unactuated solenoid valve (Y34/Y33). The pressure rising further now opens the non-return valve (lock-up valve unit 734) at the opposite port B and/or A and the hydraulic cylinder is retracted or extended.

Swinging the grain tank unloading tube
Hydraulic cylinders

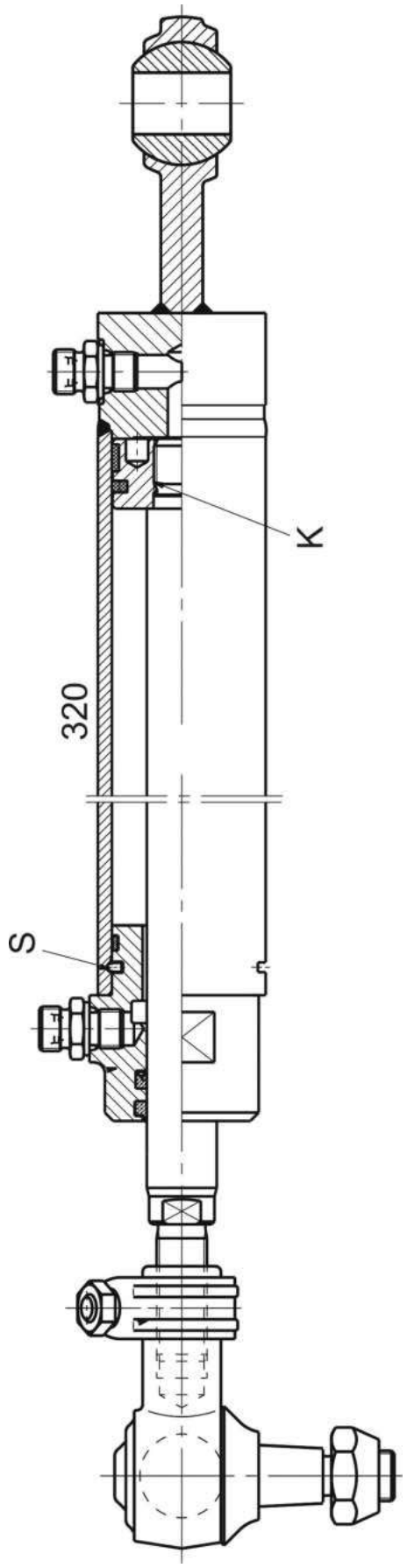

Key to diagram:	320	Swing grain tank unloading tube hydraulic cylinder
	S	Securing wire
	K	Ram thread glued with liquid locking compound

Swinging the grain tank unloading tube
Lock-up valve unit (734)

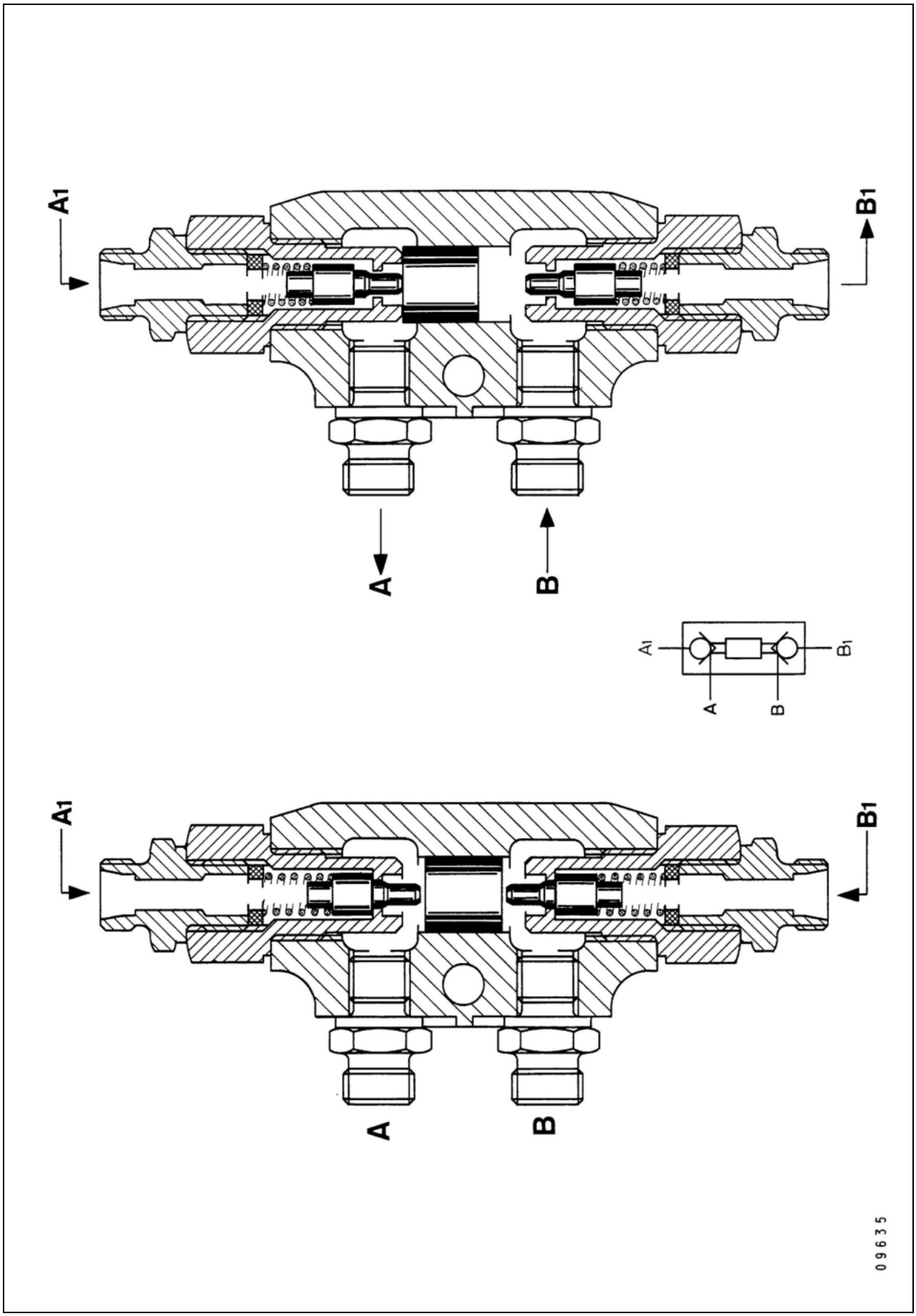

Key to diagram:

A	Hydraulic valve port
B	Hydraulic valve port
A1	Consumer port
B1	Consumer port

Description of function:

Lock-up valve units (pilot controlled non-return valves) are used in order to lock functions while pressure is relieved and thus to ensure a fixed position of a consumer.
A rising pressure in port (B) moves the internal ram (K). This opens the opposite non-return valve in port A - the return line of the hydraulic cylinder to the tank is relieved (connection A-A1).
The continued pressure increase now opens the non-return valve in port B. The connection to consumer (B-B1) is relieved.

3.7 Reverse front attachment
3/2-way valve Y86

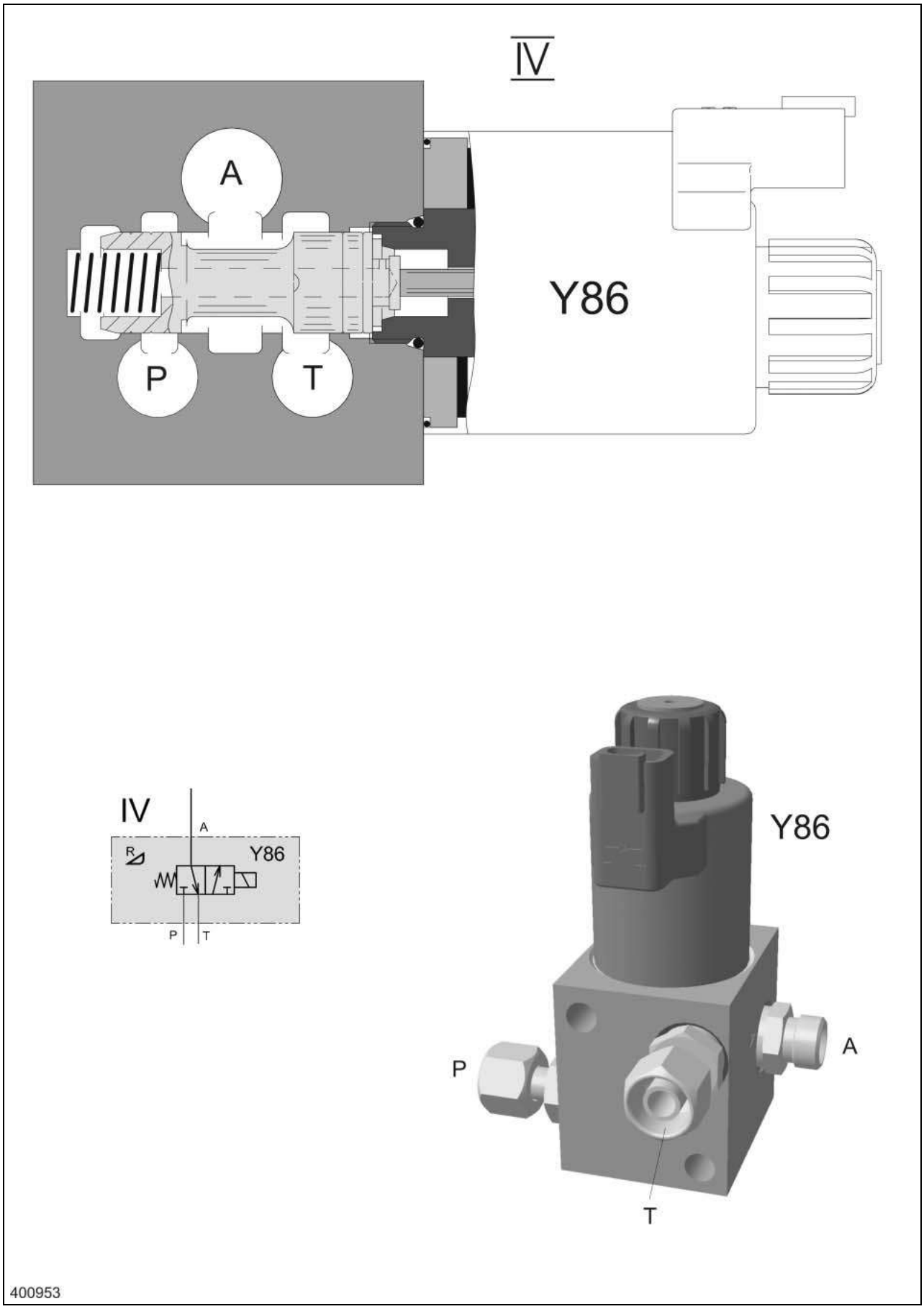

Key to diagram:

IV	Front attachment reverse valve block
Y86	Reverse front attachment solenoid valve
A	Consumer port
P1	Working hydraulics pump port
T	Tank port

Description of function:

Neutral

The spring force displaces the oil from the reversing cylinder (353) via the connection A-T in the solenoid valve (Y86) to the tank. During this process, port P1 is closed by the spool.

Reversing

The solenoid valve (Y86) and the master valve (Y77) are actuated. The return line to the tank is now closed by the spool in solenoid valve (Y86) and the connection from P to the consumer port A is established. The reversing cylinder (353) now extends and swings the hydraulic motor (226) to the drive gearwheel. Just before reaching its end position, the oil flow from the reversing cylinder (353) to the hydraulic motor (226) is released, ensuring reliable gearwheel engaging. The non-return valve (732) keeps the hydraulic motor (226) from starting when pressure peaks occur in the return line.

Reverse front attachment
Hydraulic cylinders

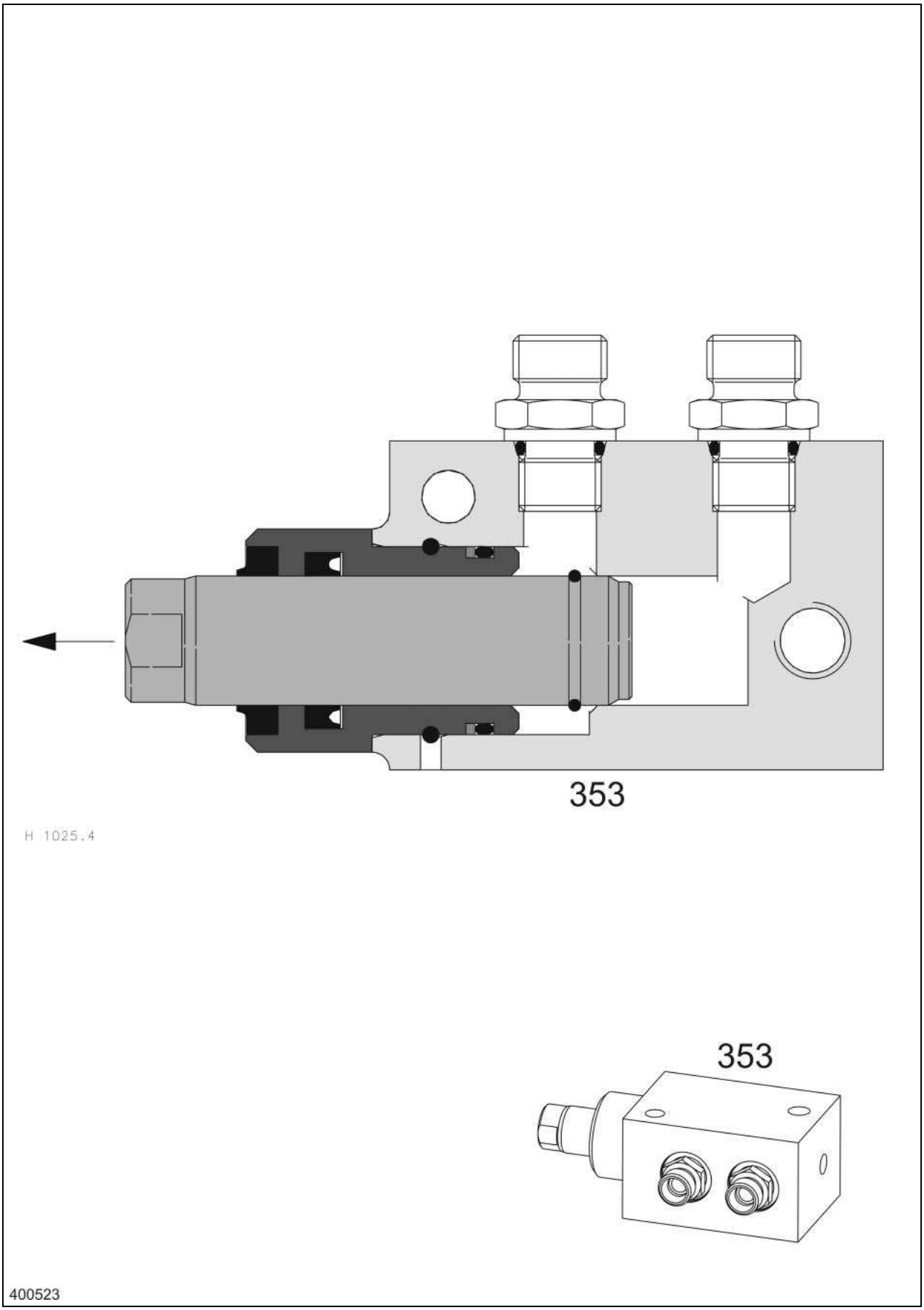

Key to diagram: 353 Reverse front attachment hydraulic cylinder

Description of function:

Reversing

When the solenoid valve (Y86) is actuated, the reversing cylinder (353) extends and swings the hydraulic motor (226) to the drive gearwheel. Just before reaching its end position, the oil flow from the reversing cylinder (353) to the hydraulic motor (226) is released. This ensures reliable engaging of the gearwheels for the reversing process.

The non-return valve (732) keeps the hydraulic motor (226) from starting when pressure peaks occur in the return line.

Adjustment

The reverser support is aligned towards the feed rake conveyor drive shaft by adjusting an eccentric bushing on the reverser cylinder (353). The piston stroke is adjusted using the set screw (E). With the reverser swung in, the set screw (E) must have a play of **0.5 mm** from the end stop, then jam the set screw (E).

Installation position of reverser motor OMP 200

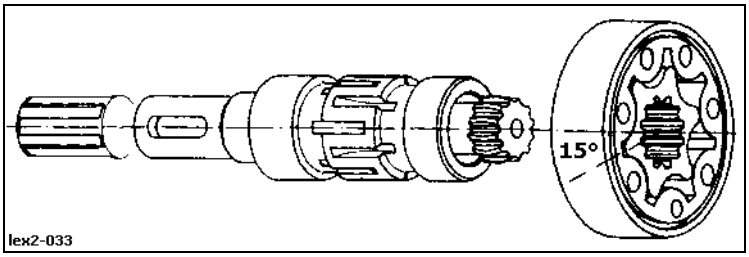

Chapter 4

Ground drive hydraulics

4.1

LINDE ground drive hydraulics circuit diagram

4.1 LINDE ground drive hydraulics circuit diagram

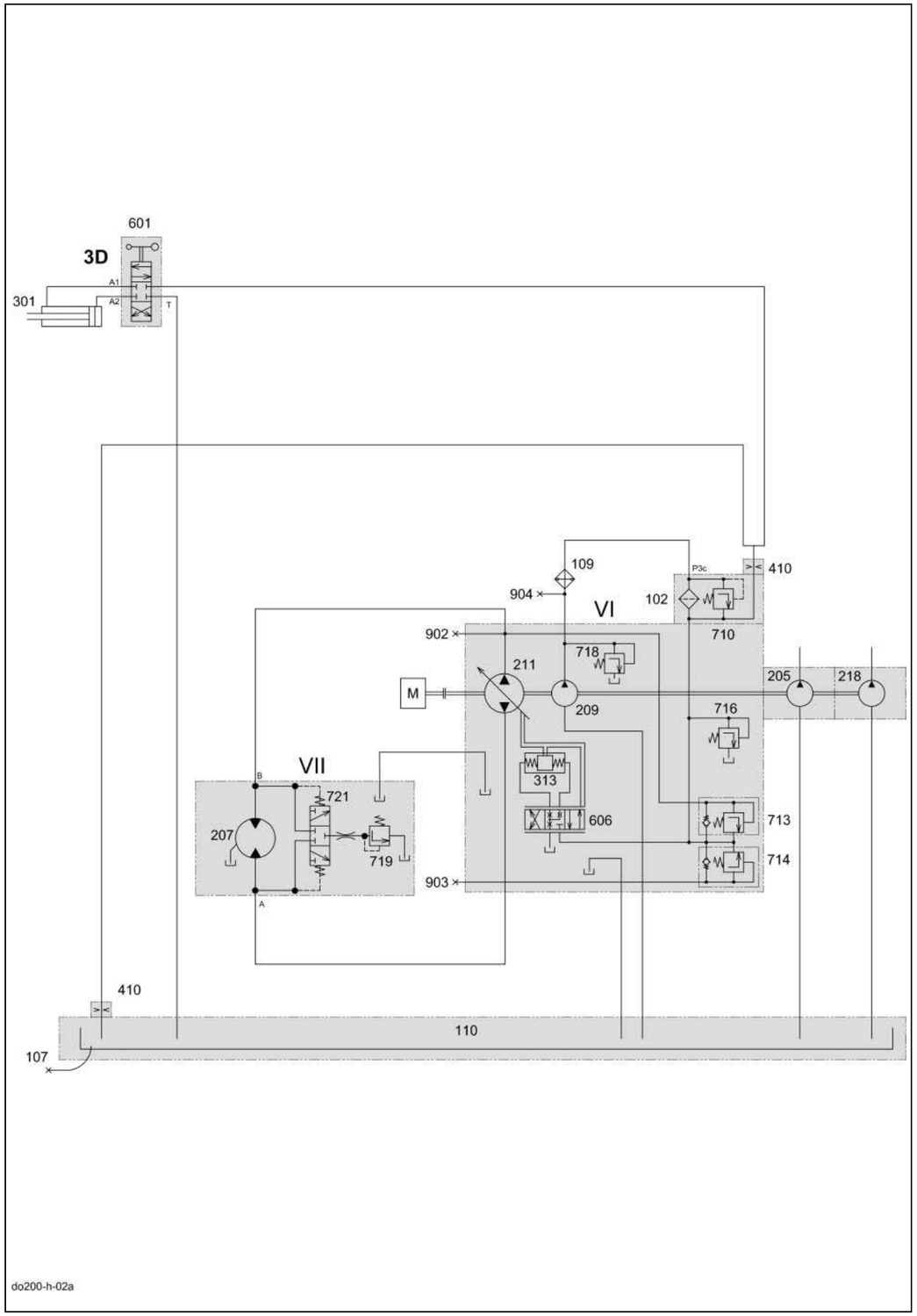

Key to diagram:

VI	Ground drive hydraulics hydrostatic pump
VII	Ground drive hydraulics hydrostatic motor
102	Pressure filter ..... 10 µm
107	Oil drain
109	Oil cooler
110	Oil tank
205	Working hydraulics pump ..... 10.8 cm^3/rev.
207	Ground drive fixed displacement motor HMF 75 ..... 75 cm^3/rev.
209	Ground drive feed pump ..... 22.5 cm^3/rev.
211	Ground drive variable displacement pump HPV 75 ... 75 cm^3/rev.
218	Steering hydraulics pump ..... 6 cm^3/rev.
301	3-D sieve pan hydraulic cylinder
313	Ground drive servo control pump hydraulic cylinder
410	Orifice plate ..... Ø 1.5 mm
601	3D sieve pan pendulum control 4/3 way valve
606	Ground drive servo control 4/3 way valve
710	Ground drive filter bypass valve ..... 2 bar
713	Ground drive multi-function valve, reverse ..... 420 bar
714	Ground drive multi-function valve, forward ..... 420 bar
716	Ground drive feed pressure relief valve..... 19 bar
718	Ground drive feed circuit cold start injector ..... 25 bar
719	Ground drive flush pressure control valve ..... 10 bar
721	Ground drive flush-out shuttle valve
902	Ground drive hydraulics high pressure backward measuring point
903	Ground drive hydraulics high pressure forward measuring point
904	Ground drive hydraulics feed pressure measuring point

Description of function:

Oil supply	After starting the diesel engine, the ground drive feed pump (209) is driven. In this process, the oil quantity is taken from the housing. The housing is directly connected with the oil tank (110).
Feed pressure circuit	The feed pressure builds up from the oil quantity pumped through the oil cooler (109) and the pressure filter (102) by the ground drive feed pump (209) against the ground drive feed pressure relief valve (716). Depending on the spring setting, the oil flow is pre-stressed and then relieved to the tank. The feed pressure is applied at the combined ground drive multi-function valves (713/714) and at both servo cylinders via the ground drive servo adjustment valve (606). When the ground drive variable displacement pump (211) is not swung out, the feed pressure propagates to both sides of the high-pressure circuit via ground drive multi-function valves (713/714).
Servo control	The cable mounted on the ground speed control lever moves the spool in the ground drive servo adjustment valve (606) from the neutral position to one or the other direction. Depending on the direction of travel, one of the ground drive pump servo adjustment hydraulic cylinders (313) is pressure-relieved whereas the other hydraulic cylinder remains connected to the feed pressure circuit. The motion at the swing disc corresponds to the pressure difference between the hydraulic cylinders. The ground drive pump servo adjustment hydraulic cylinders (313) swing the ground drive variable displacement pump (211) only by the path defined by the ground speed control lever because there is a mechanical feedback of the swing angle to the ground drive servo adjustment valve (606). This mechanical feedback balances the spool in the ground drive servo adjustment valve (606) and therefore the pressure level between the two hydraulic cylinders at the control edge so that the defined swing angle is maintained.
High-pressure circuit	As soon as the ground drive variable displacement pump (211) is swung out, an axial motion is added to the radial motion of the pump unit. This axial motion displaces the oil in the cylinder space of the rotor and thus acts on the motor unit which converts this energy into a rotating motion by supporting against the fixed inclined disc. The respective suction side of the ground drive variable displacement pump (211) is pre-stressed via the feed pressure circuit and the corresponding ground drive multi-function valve (713/714). This ensures that the ground drive variable displacement pump (211) is sufficiently filled and that any occurring leaks are compensated. Since feed pressure is always applied on the suction side of the ground drive variable displacement pump (211) as well as on the return flow side of the ground drive fixed displacement motor (210), this area is referred to as low-pressure side within the high-pressure circuit.

Description of function:

High-pressure limitation	If the system pressure rises above the set maximum value, this overpressure is relieved to the feed pressure circuit by the ground drive multi-function valves (713/714). The high-pressure limitation should only respond for a short time during operation since the large oil flow which has to be displaced by the heavily pre-stressed valves would rapidly overheat the system.
Flushing device	The respective high-pressure side in the high-pressure circuit actuates the ground drive purging shuttle valve (721) in the ground drive fixed displacement motor (210) so the corresponding low-pressure side has a connection to the motor housing via the ground drive purge pressure control valve (719). Since the pressure setting of the ground drive purge pressure control valve (719) is lower than that of the ground drive feed pressure relief valve (716), a constant oil quantity is exchanged by the ground drive feed pump (209) via the restrictor in the ground drive purge pressure control valve (719).

4.2 Pump unit

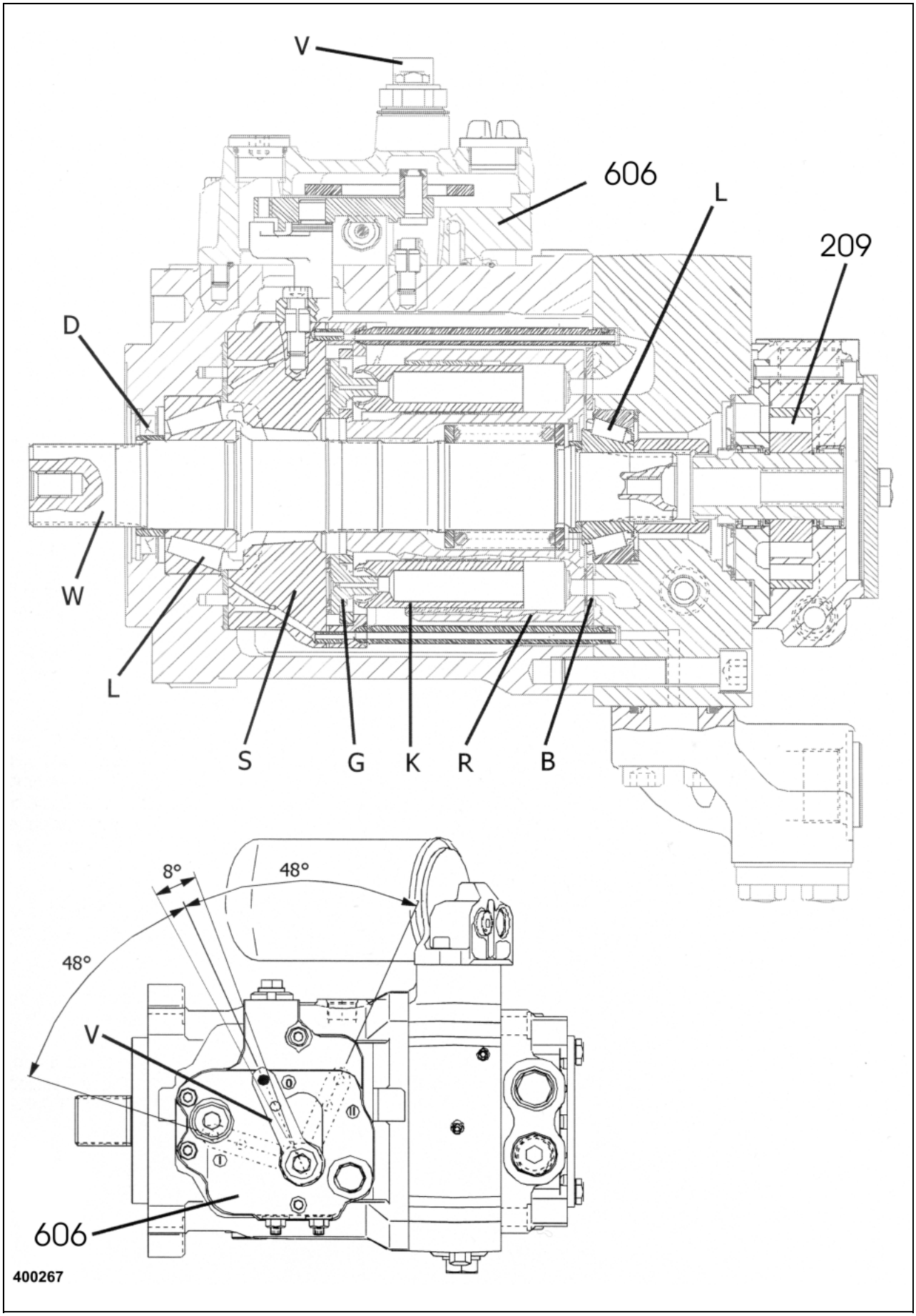

Key to diagram:

209	Ground drive feed pump ..... 22 cm^3
606	Ground drive servo adjustment valve
B	Control bottom
D	Shaft seal
G	Slide
K	Ram
L	Bearing
R	Cylinder rotor
S	Swing disc
V	Adjusting lever
W	Drive shaft

Description of function:

As soon as the diesel engine is started, the cylinder rotor (R) as well as the ground drive feed pump (209) are driven by the nine pistons (K) arranged radially around the drive shaft (W).
In this process, the pistons (K) are pressed against the swing disc (S) by means of the slides (G) due to the feed pressure applied on both sides of the high-pressure circuit (H).

One of the servo cylinders is actuated by the ground drive servo adjustment valve (606) so that this cylinder swings the swing disc (S) according to the direction of travel and the ground speed.
During the swinging motion, the pistons (K) make an axial movement on the inclined plane of the swing disc (S) which results in the oil in the filled cylinder space being displaced and in a pressure building up against the resistance at the motor.
When the entire oil quantity in the cylinder space has been displaced, the piston (K) rotating with the rotor (R) is pushed back by the feed pressure and against the sloping inclined plane of the swing disc (S) on the low-pressure side.
The cylinder spaces in the rotor (R) are thus filled one after the other on the sloping side of the swing disc (S) (low pressure) and then displace this oil quantity on the rising side (high pressure) against the motor unit.

According to the direction of travel, the swing disc (S) is moved to one or the other direction, making high pressure and low pressure change sides as well. The ground speed depends on the oil flow quantity and consequently on the swing angle of the swing disc (S). The swing angle pre-set on the ground speed control lever is maintained by the mechanical feedback from the swing disc (S) to the servo control valve (606).

The low-pressure side is separated from the high-pressure side inside the pump unit above the control bottom (B). For sealing purposes, the cylinder rotor (R) is pushed against the control bottom (B) only by a compression spring.

The exact return of the swing disc to its neutral position is achieved by compressed springs, and this factory setting cannot be modified from the outside.
The position of the adjusting lever (V) on the shaft gearing is marked with a punch blow on the servo adjustment housing. This position corresponds to the neutral position of the servo adjustment valve which is achieved within an angle of 8° of the adjusting range.

4.3 Servo control valve

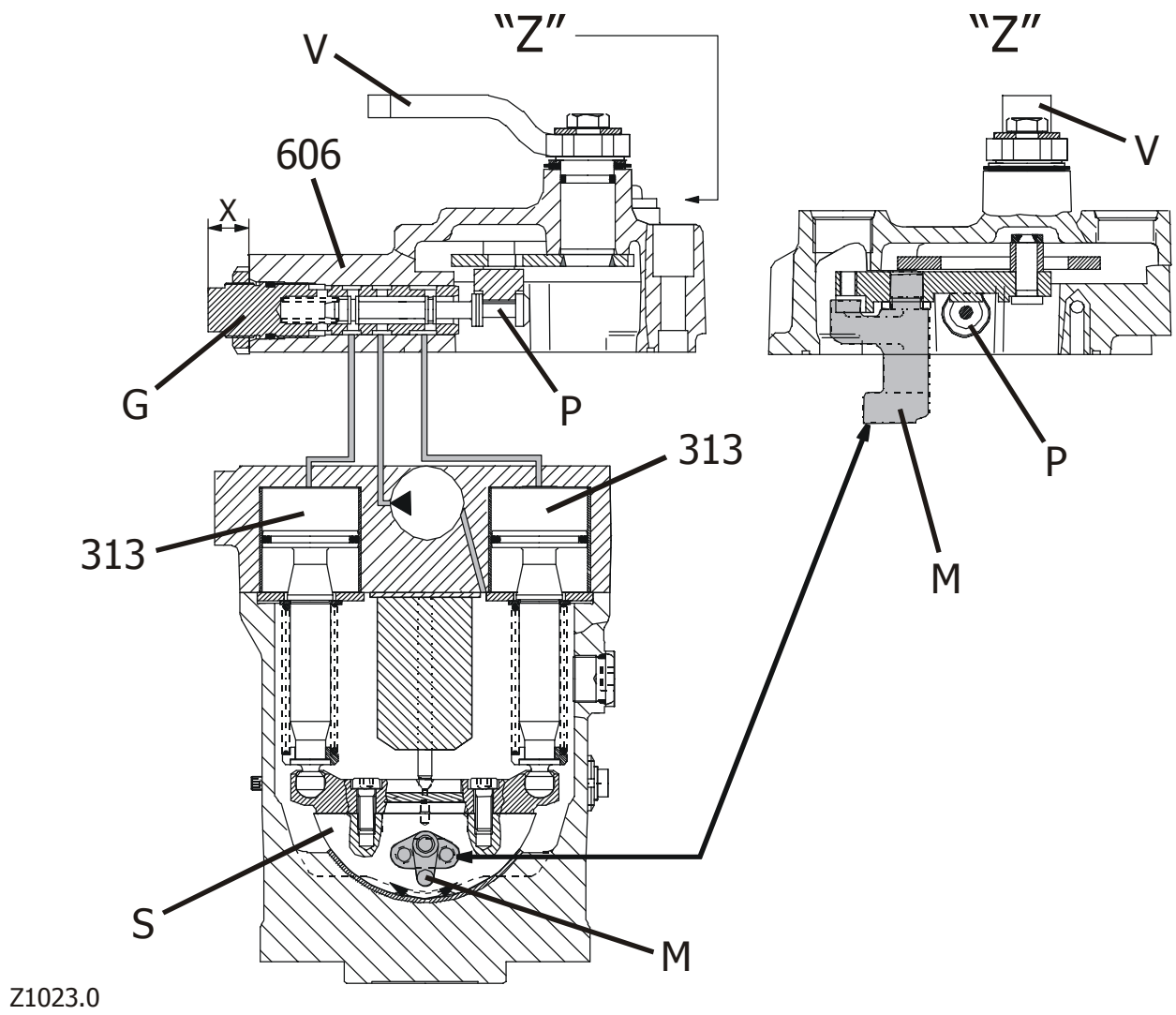

Key to diagram:

313	Ground drive servo control pump hydraulic cylinder
606	Ground drive servo adjustment valve
G	Threaded bushing
M	Mechanical feedback
P	Spool
S	Swing disc
V	Adjusting lever

Description of function:

Servo control valve

In the neutral position of the ground drive servo adjustment valve (606), both ground drive pump servo control hydraulic cylinders (313) are pressure-loaded, keeping the swing disc (S) stable in any position.

The cable mounted on the adjusting lever (V) moves the spool (P) in the ground drive servo adjustment valve (606) from the neutral position to one or the other direction. Depending on the direction of travel, one of the ground drive pump servo adjustment hydraulic cylinders (313) is thus pressure-relieved whereas the other servo cylinder remains connected to the feed pressure circuit.
The movement at the swing disc (S) thus corresponds to the pressure difference between the ground drive pump servo adjustment hydraulic cylinders (313).

The ground drive pump servo adjustment hydraulic cylinders (313) swing the variable displacement pump only by the path defined by the adjusting lever (V) because there is a mechanical feedback (M) of the swing angle to the ground drive servo adjustment valve (606).
This mechanical feedback (M) balances the spool (P) in the ground drive servo adjustment valve (606) at the control edge to the neutral position. The pre-set swing angle is thus maintained by the pressure compensation in both ground drive pump servo adjustment hydraulic cylinders (313).

Adjusting the hydraulic neutral position:

To align the mechanical neutral position of the adjusting lever (V) with the hydraulic neutral position of the variable displacement pump, the spool (P) in the servo adjustment valve is adjusted using the threaded bushing (G). To do this, the bushing (G) is first set to a clearance of **X = 14.75 mm** (X) from the housing of the ground drive servo adjustment valve (606). A pressure measurement on both sides of the high-pressure circuit determines the respective pressure rise caused by rotating the bushing (G) to one or the other direction. The centre position of the path by which the bushing (G) has been rotated corresponds to the average neutral position.

4.4 Ground drive multi-function valve

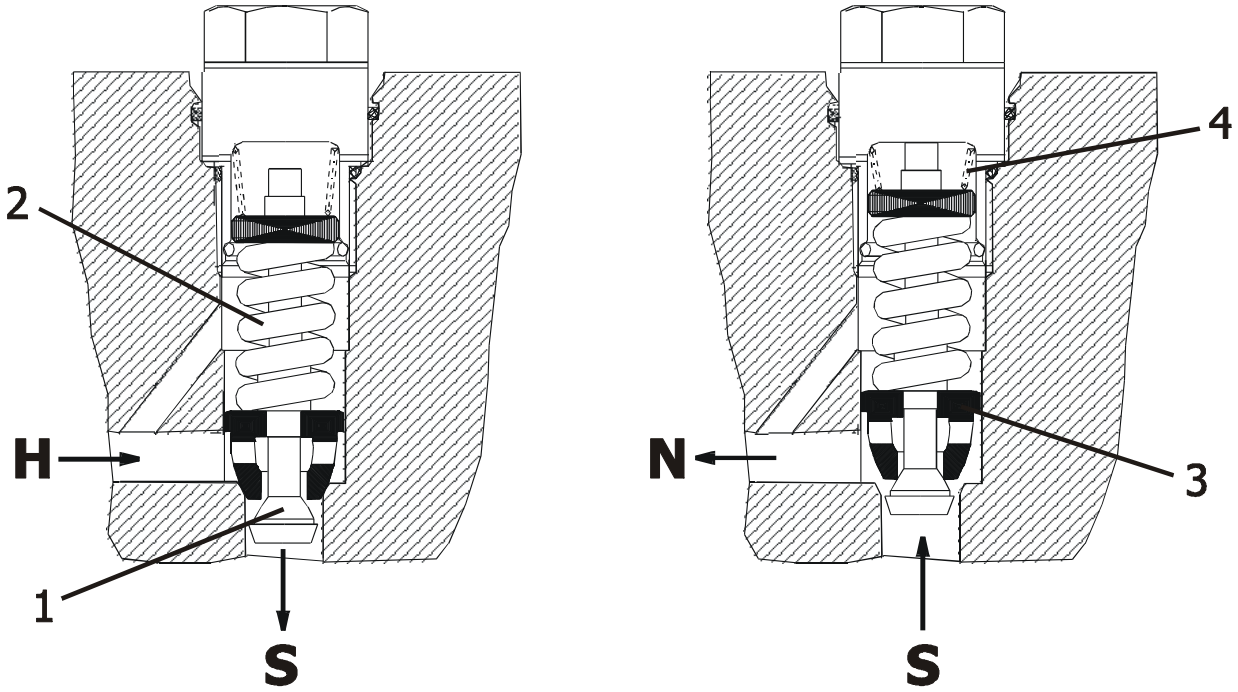

Z1022.0

Key to diagram:

1	Valve plunger
2	High-pressure spring
3	Valve insert
4	Feed spring
H	High pressure
N	No high pressure
S	Feed pressure

Description of function:

High-pressure limitation

High pressure (H) is applied to the valve plunger (1) via the bores in the valve cartridge.
When the system pressure exceeds to pre-set value of the high-pressure spring (2), the valve plunger (1) backs away to the bottom against the spring pressure and relieves the high-pressure side towards the feed pressure circuit (S).

Feed

As soon as there is no high pressure (N) applied against the valve cartridge, the feed pressure (S) presses the entire valve insert (3) upwards against the feed spring (4) and thus opens the feed pressure circuit (S) to the low-pressure side (N).

4.5 Ground drive fixed displacement motor

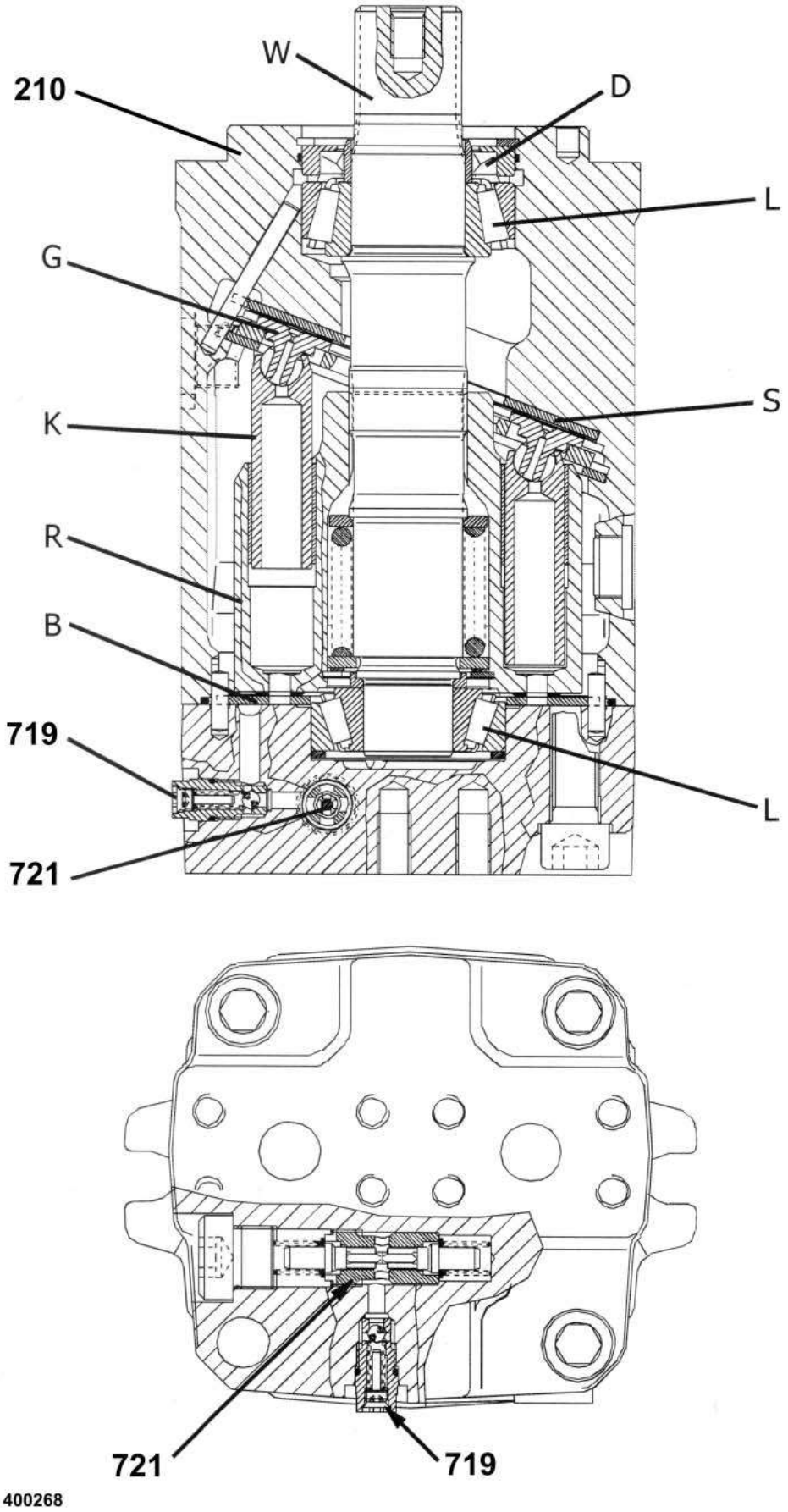

Key to diagram:

210	Ground drive fixed displacement motor ..... HMF 75
721	Ground drive flush-out shuttle valve
719	Ground drive flush pressure control valve ..... 10 bar
B	Control bottom
D	Shaft seal
G	Slide
K	Ram
L	Bearing
R	Cylinder rotor
S	Fixed inclined disc
W	Driven shaft

Description of function:

See also ground drive hydraulics circuit diagram

As soon as the diesel engine is started, the feed pump in the pump unit is also driven. In this process, the pistons (K) in the cylinder rotor (R) of the motor unit are pressed against the fixed inclined disc (S) by means of the slides (G) due to the feed pressure applied on both sides of the high-pressure circuit.
As soon as the variable displacement pump is swung out, the pressure builds up against the nine pistons (K) in the cylinder rotor (R) which is geared to the driven shaft (W), one after the other. Here the pistons (K) support themselves against the inclined plane of the fixed inclined disc (S) and thus convert this energy into a rotating motion against the resistance at the driven shaft (W).

The direction of rotation here depends on the direction of the oil flow and thus on the swing direction of the variable displacement pump, with high pressure and low pressure changing the sides. The motor speed results from the oil flow quantity therefore from the swing angle of the variable displacement pump.

The low-pressure side is separated from the high-pressure side inside the motor unit above the control bottom (B). For sealing purposes, the cylinder rotor (R) is pushed against the control bottom (B) only by a compression spring.

The respective high-pressure side in the high-pressure circuit actuates the ground drive purging shuttle valve (721) in the fixed displacement motor so the corresponding low-pressure side has a connection to the motor housing via the ground drive purge pressure control valve (719).
Since the pressure setting of the ground drive purge pressure control valve (719) is lower than that of the feed pressure relief valve, a constant oil quantity is exchanged by the feed pump (209) via the restrictor in the ground drive purge pressure control valve (719).

4.6 Maintenance

Filling instructions	Engage 3rd gear at the gearshift lever Disengage all-wheel drive Apply parking brake Connect pressure gauges on both high-pressure sides (M1+M2) Fill tank with hydraulic oil Pull out engine cut-off system relay and/or cable jumper Crank the diesel engine for a short period using the electric starting motor Check and correct the oil level Repeat procedure until the pressure has risen by approx. 10 bar Re-install engine cut-off system relay and/or cable jumper Start diesel engine at min. no-load speed Load the system with 50-150 bar forward for approx. 1 minute Load the system with 50-150 bar backward for approx. 1 minute Shut off diesel engine Check and correct the oil level if necessary Set gearshift lever to neutral position Start diesel engine at min. no-load speed Swing variable displacement pump forward for approx. 2 minutes Swing variable displacement pump backward for approx. 2 minutes Shut off diesel engine Check and correct the oil level if necessary
Inspection regulations	Connect pressure gauges on both high-pressure sides Apply parking brake Heat up the system to an operating temperature of approx. 60°C Move ground speed control lever to neutral position Set diesel engine to max. no-load speed Measure the feed pressure: 19 bar Feed pressure difference on both sides: max. 3 bar Swing out the variable displacement pump fully to one direction Pressure drop on low-pressure side: max. 4 bar Set diesel engine to min. no-load speed Engage 3rd gear in manual transmission Apply service brake Slowly swing the variable displacement pump forward for 5 sec. max. High pressure measurement: 420 to 450 bar Low pressure measurement: min. 14 bar Slowly swing the variable displacement pump backward for 5 sec. max. High pressure measurement: 420 to 450 bar Low pressure measurement: min. 14 bar Shut off diesel engine Remove pressure gauge

4.7 3D cleaning system

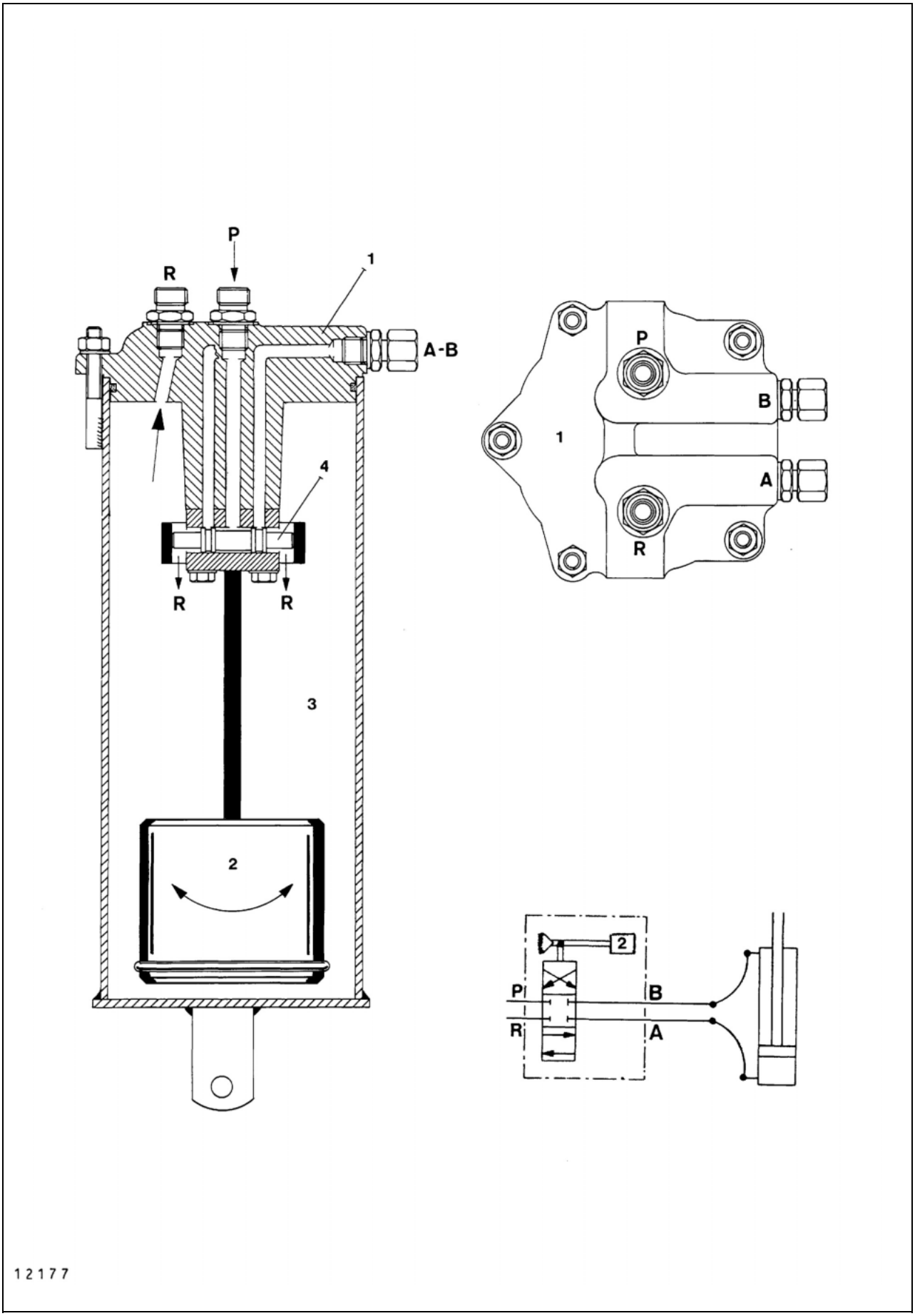

Key to diagram:

1	Control head
2	Pendulum
3	Cup
4	Spool

Description of function:

Volumetric flow is applied to port (P) of the control head. When the pendulum (2) is in the centre position, P is blocked at the spool (4). When the pendulum changes its position to the right or left, relative to the cup, the spool (4) is moved. In this process, connections are made between P and A as well as B and R or between P and B as well as A and R, depending on the direction in which the pendulum moves.

Position of components

5-k-20

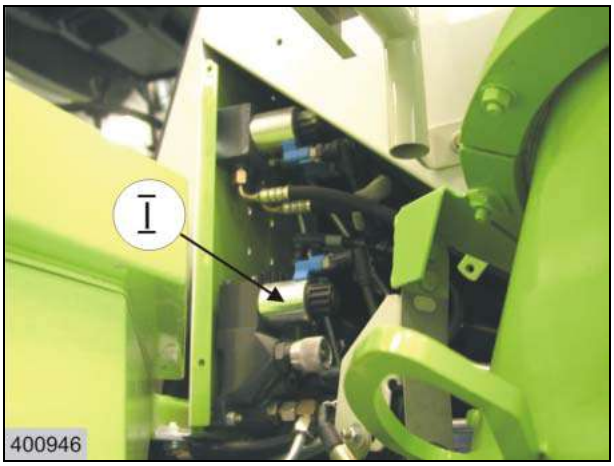

4-i-16

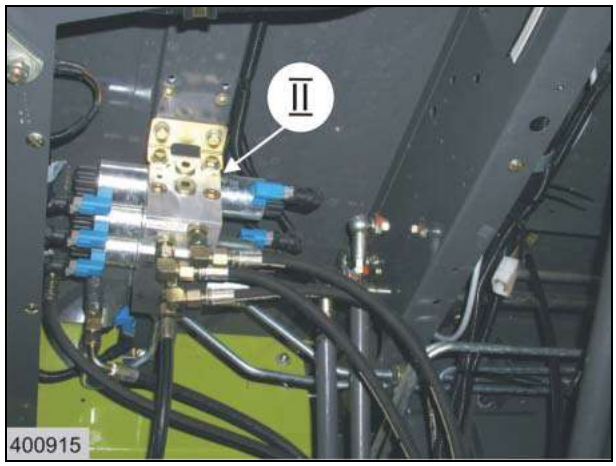

5-k-20

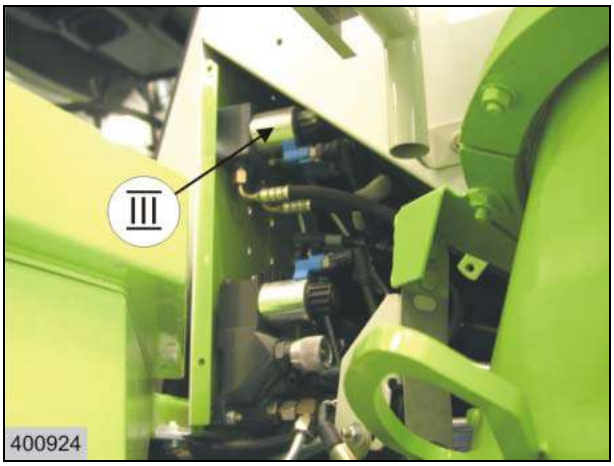

4-i-16

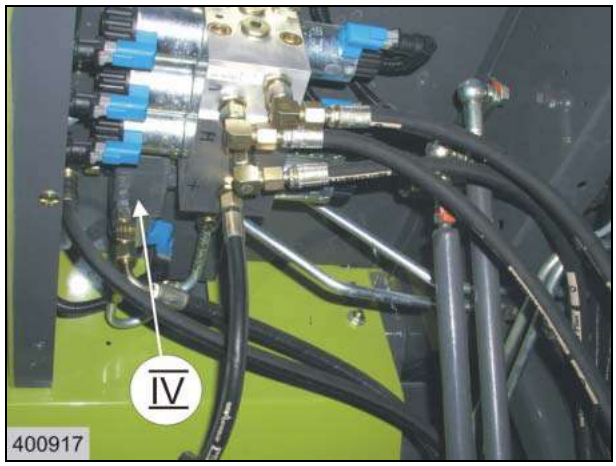

5-i-18

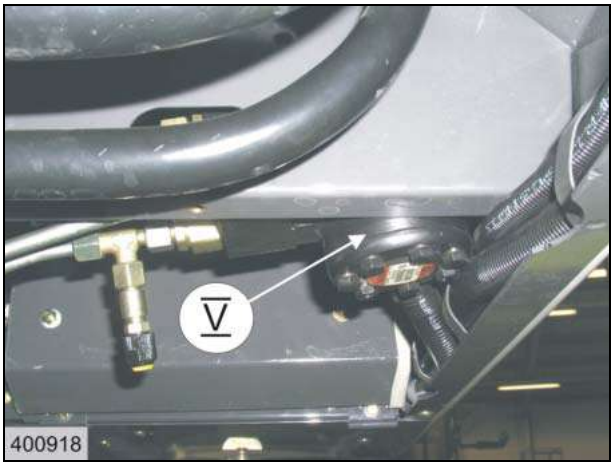

3-o-19

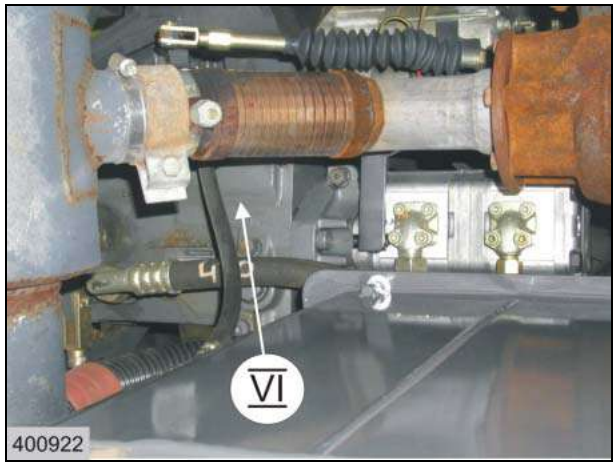

7-j-19

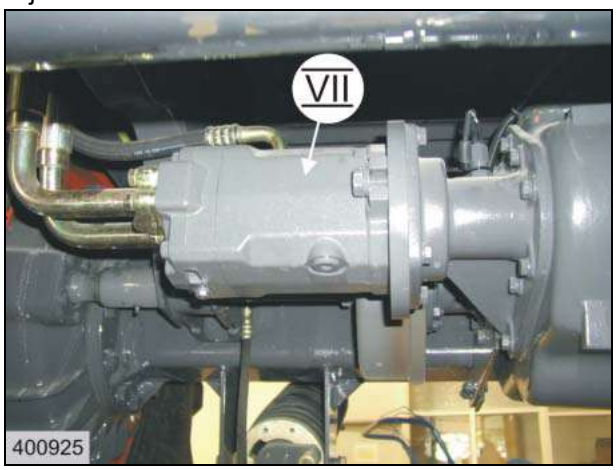

3-o-19

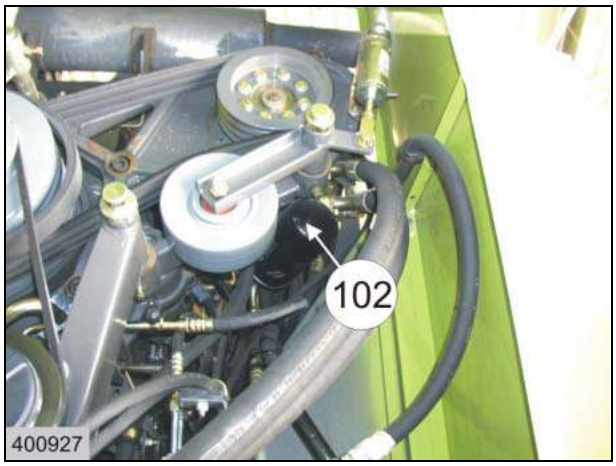

3-o-16

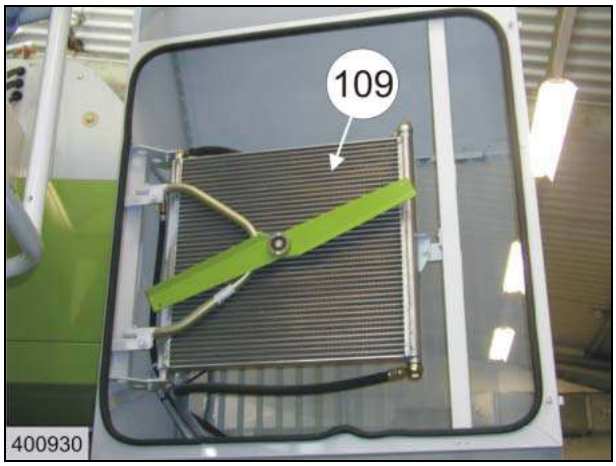

3-o-19

3-o-19

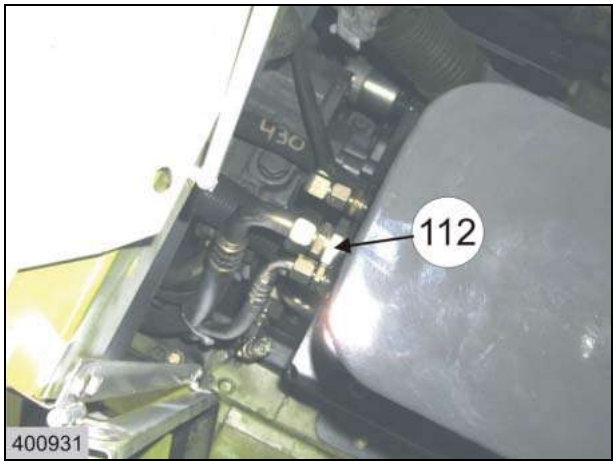

3-o-19

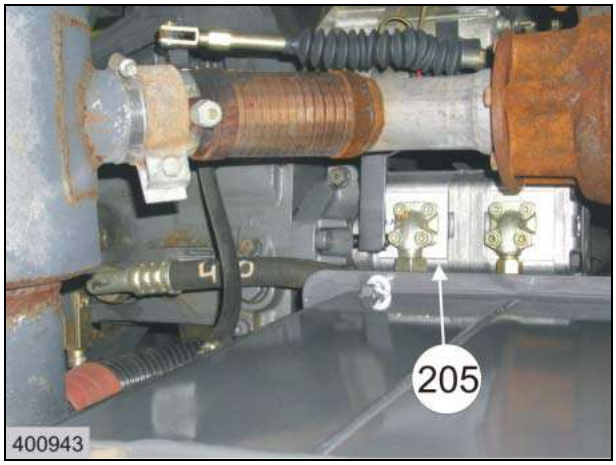

7-j-19

3-o-19

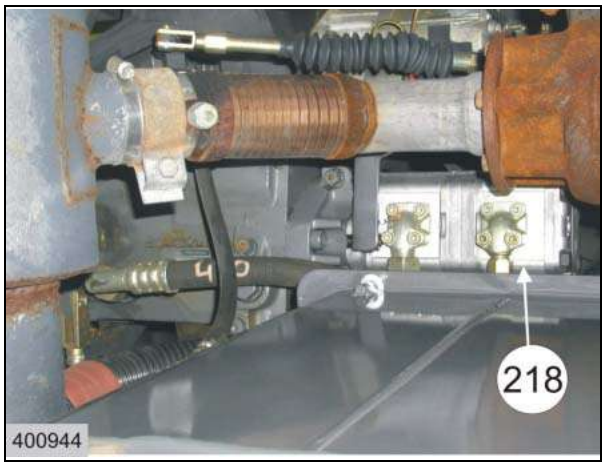

6-g-16

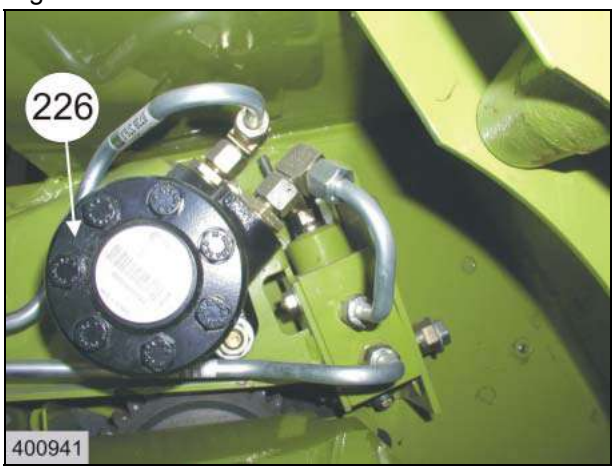

6-n-20

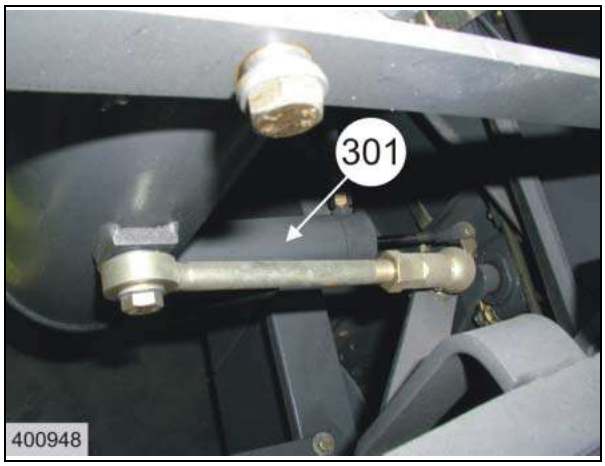

4-k-16

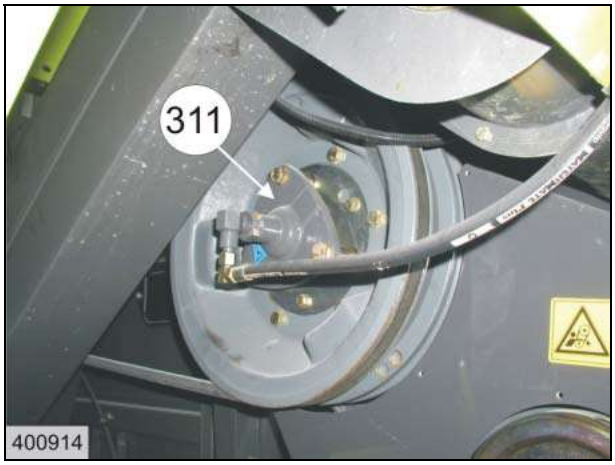

4-m-20

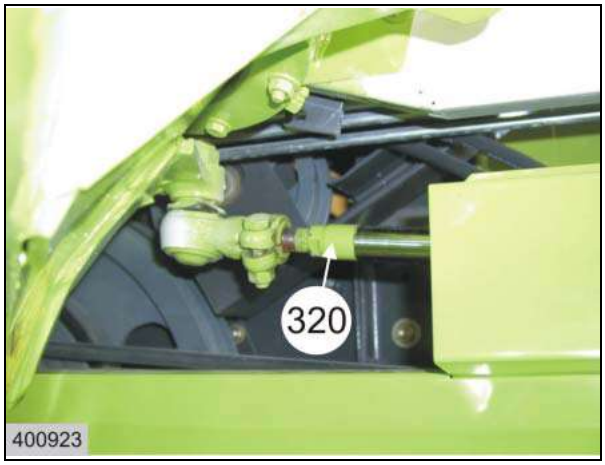

7-r-18

7-i-18

6-g-16

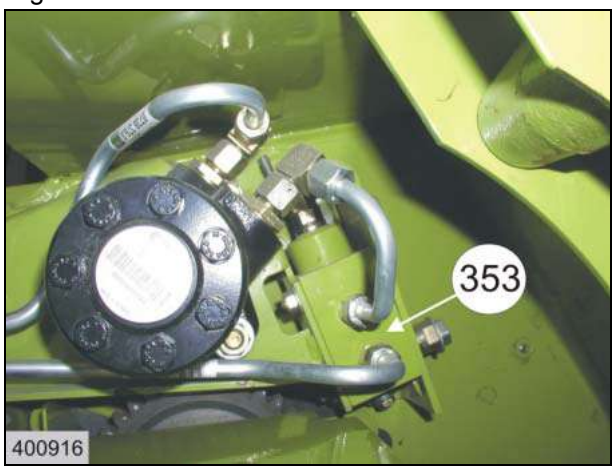

4-k-16

6-n-20

5-i-18

5-i-18

Component grid

Component grid

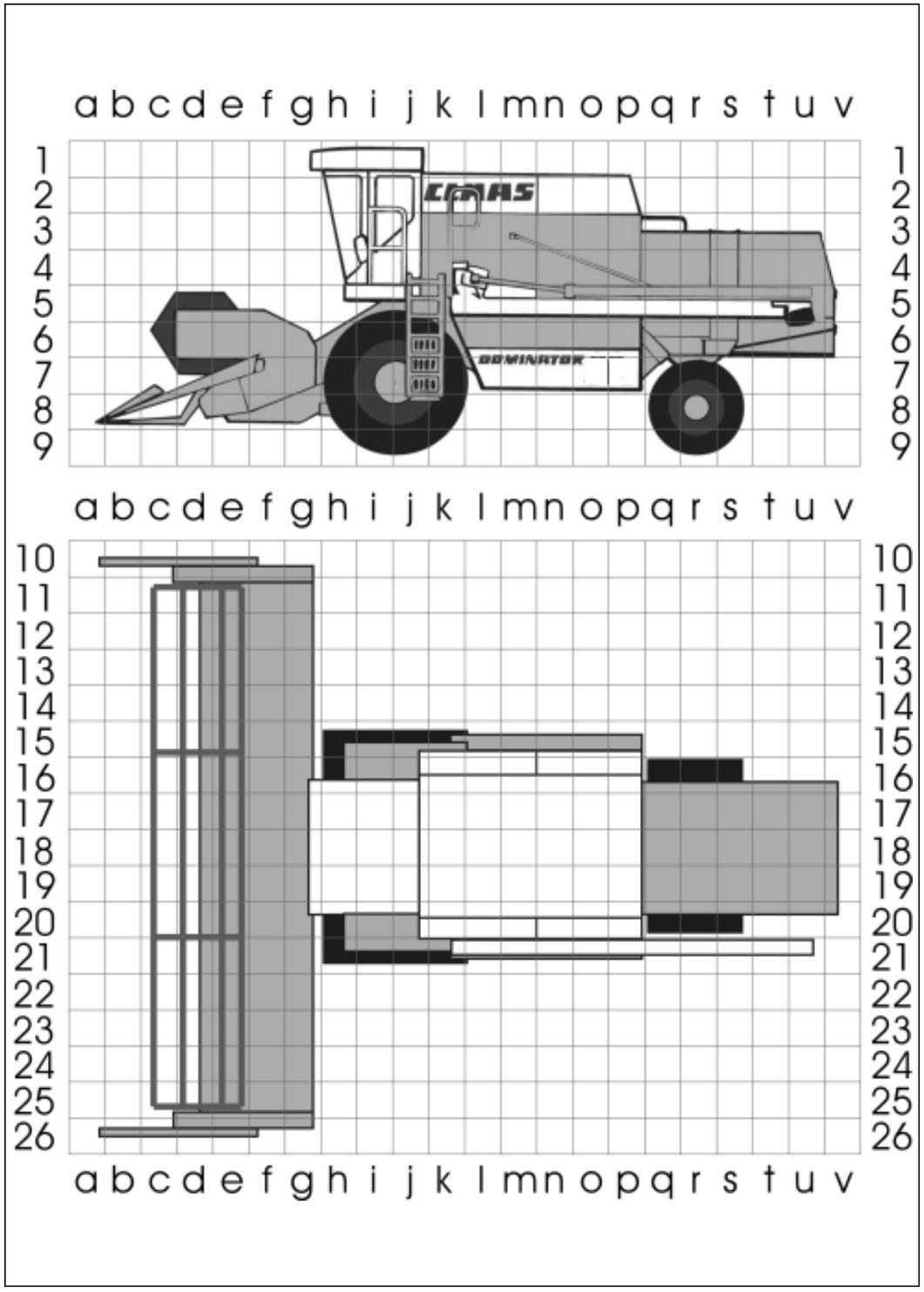

Index

Hydraulic System

Index:

CLAAS KGaA mbH
33426 Harsewinkel
Germany

Our contribution to the environment: CLAAS have printed this manual on 100 % chlorine free paper.

CLAAS KGaA mbH
Postfach 1163
33426 Harsewinkel
Tel. +49 (0)5247 12-0
www.claas.com

0293 151.1
SYS-H DOMINATOR 140- 150
EN - 01.05 - NF
Printed in Germany